REV.	ECN NO.	DATE	SIGN	DESCRIPTION
D	C201524	2020/10/05	Vicky	△D X4
E	C210211	2021/03/18	Ruru	△E X2
F	C221876	2022/12/06	Ruru	△F X1

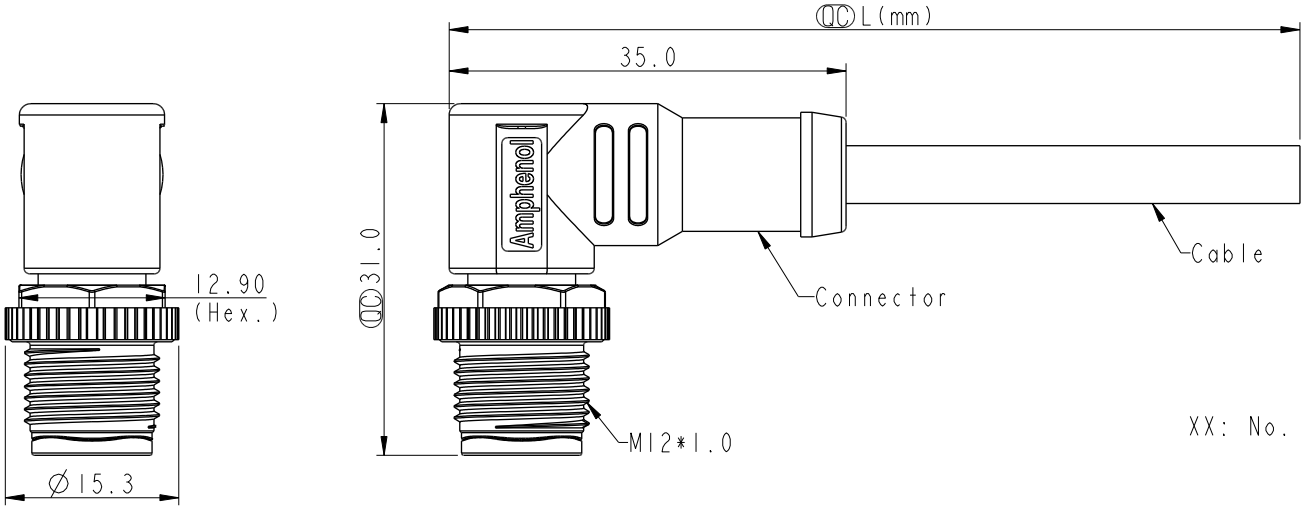

△D
MSBP-XXBMMM-SR8DXX

XX: No. Of Pin

XX:01~99Meters
01:01Meter
02:02Meters
:
99:99Meters

Pin Out	Pin #	Wire	
	5	Gray	灰
	4	Black	黑
	3	Blue	藍
	2	White	白
	1	Brown	棕

Conn.

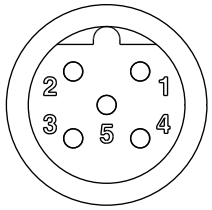

5P

Pin Assignments Front View

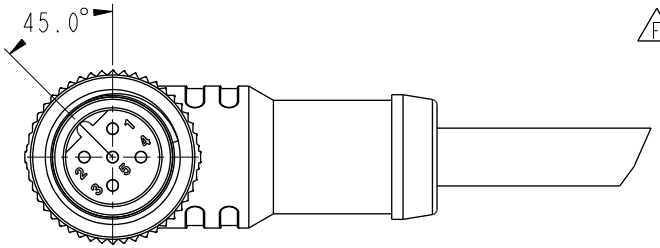

Conn.

Note: △D △E
* RoHS Compliant
* QC Important dimension
△F △C * Waterproof rate: IP68, mated 1m/24h
IP69K, mated
* Connector
Housing: Thermoplastic, Black
Pin: Copper alloy, Gold plated
Nut: Thermoplastic, Black
Outer mold: Thermoplastic, Black
* Cable: UL2517, 22#*5C, OD=5.1mm, PVC Jacket, Black
* Cable length tolerance: 1M: +50/-0 mm
1M < L ≦ 3M: +100/-0 mm
3M < L ≦ 5M: +150/-0 mm
5M < L ≦ 10M: ±100 mm
10M < L ≦ 20M: ±200 mm
20M < L ≦ 30M: ±300 mm
30M < L ≦ 99M: ±500 mm

UNIT: mm

TOLERANCE
±0.5mm

TITLE: N SEN, M12 B -PLASTIC, SCREW CABLE W/O SR, M, M, MOLDING △E

SCALE: 3:2 | SIZE: A4 | SHEET 1 OF 1
REV. F | WC-REV. A.2 | QC: Inspection item

Amphenol LTW
安費諾亮泰企業股份有限公司

ITEM NO	DRAWN BY: Ruru	DATE: 2019-01-21
DWG NO: △D MSBP-XXBMMM-SR8DXX	CHECKED BY: Rita	DATE: 2019-01-21
CUSTOMER: ALTW	APPROVED BY: Max	DATE: 2019-01-21

W10814-03-RW01A2

THIS DOCUMENT IS SUBJECT TO CHANGE WITHOUT NOTICE. IT IS CONFIDENTIAL AND A PROPERTY OF Amphenol LTW. DISCLOSURE TO THIRD PARTY HAS TO BE AUTHORIZED BY Amphenol LTW.