REV.	ECN NO.	DATE	SIGN	DESCRIPTION
B	C250160	2025/02/13	Yunchen	B *7
C	C251100	2025/08/27	Yunchen	C *1
D	C260679	2026/06/10	Yunchen	D *2

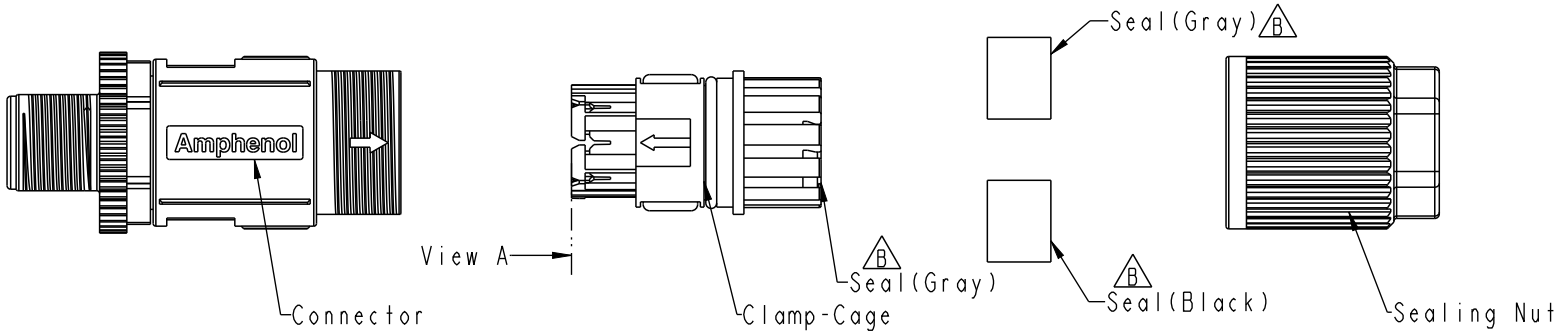

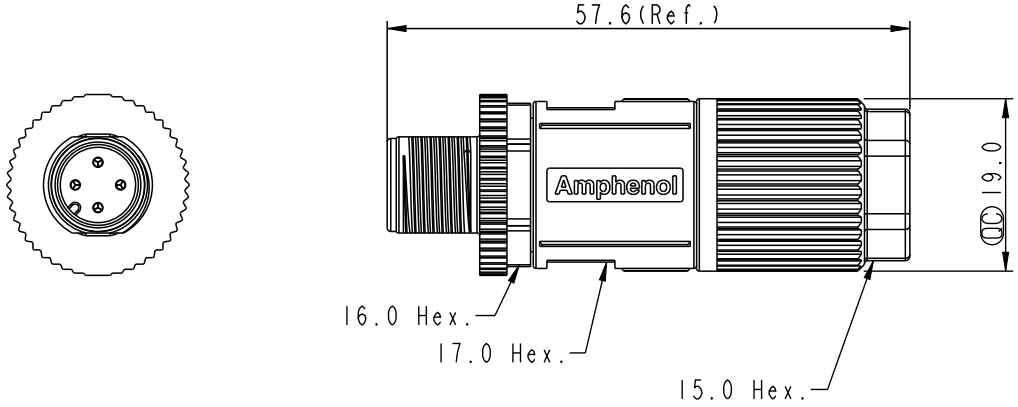

MSAS- XX BMMD-SL8001

XX:No.of Pin

Note:
* RoHS Compliant
* QC Important Dimension
* Waterproof rate: IP68, mated 1m/24h
* Connector
  Housing: Thermoplastic, Black
  B Pin: Copper alloy, Gold/Tin plated
  Extension Nut: Metal
  C O-Ring: Rubber, Black
  B * Clamp Cage: Thermoplastic, Original
* Sealing Nut: Metal
  B * Seal For Cable:
  Seal(Gray)+Seal(Gray):∅5.8mm~∅7.1mm
  Seal(Gray)+Seal(Black):∅4.7mm~∅5.7mm
  B * Applicable wire gauge: 20AWG~26AWG
* One set unassembled in one pe bag

UNIT:mm

TOLERANCE
.X ±0.25
.XX ±0.1
.XXX ±0.05
ANGLES ±1°

TITLE	M12 A-SHLD, SCREW CABLE W/O SR, M, M, F1 IDC		
SCALE 1:1	SIZE A4	SHEET 1 OF 3	
REV. D	WC-REV. .0	QC:Inspection item	

Amphenol LTW
安費諾亮泰企業股份有限公司

ITEM NO	DRAWN BY Yunchen	DATE 2026/06/10
DWG NO MSAS-XXBMMD-SL8001	CHECKED BY Wen	DATE 2026/06/10
CUSTOMER ALTW	APPROVED BY Aric	DATE 2026/06/10

W10814-03-[redacted]01A2

THIS DOCUMENT IS SUBJECT TO CHANGE WITHOUT NOTICE. IT IS CONFIDENTIAL AND A PROPERTY OF Amphenol LTW. DISCLOSURE TO THIRD PARTY HAS TO BE AUTHORIZED BY Amphenol LTW.

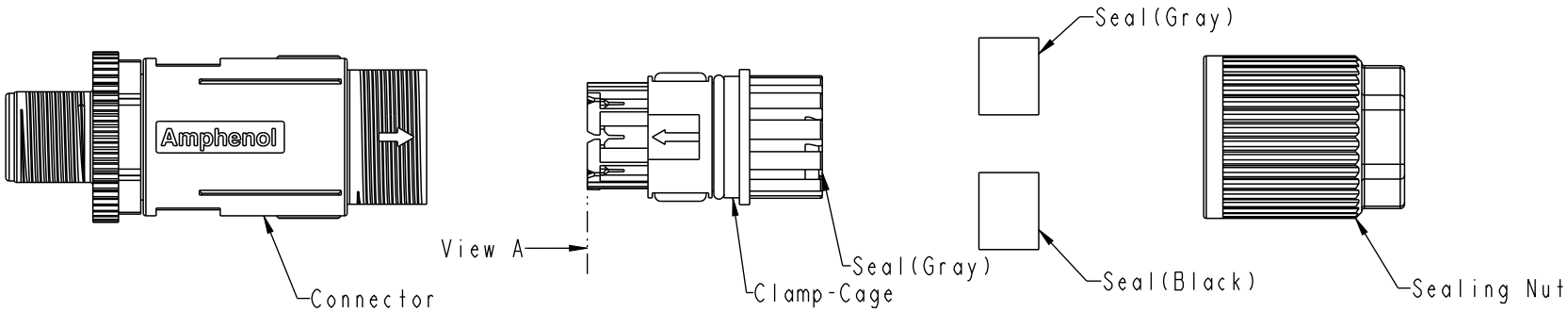

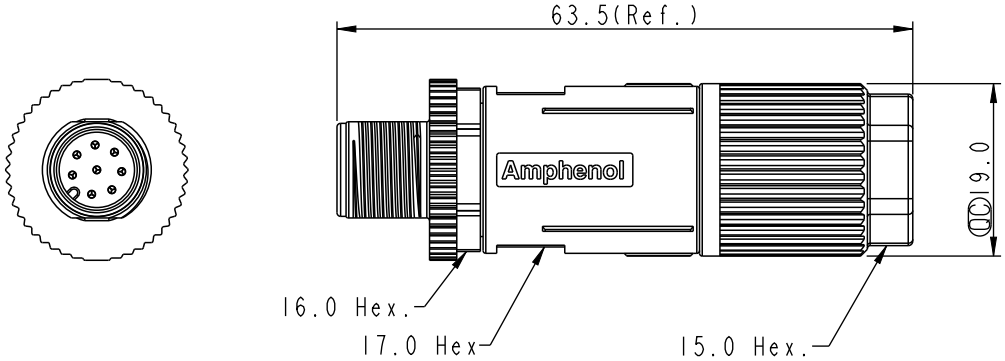

Note:
* RoHS Compliant
* Important Dimension
* Waterproof rate: IP68, mated 1m/24h
* Connector
  Housing: Thermoplastic, Black
  Pin: Copper alloy, Gold/Tin plated
  Extension Nut: Metal
  O-Ring: Rubber, Black
* Clamp Cage: Thermoplastic, Original
* Sealing Nut: Metal
* Seal For Cable:
  Seal(Gray)+Seal(Gray):∅5.8mm~∅7.1mm
  Seal(Gray)+Seal(Black):∅4.7mm~∅5.7mm
* Applicable wire gauge: 20AWG~26AWG
* One set unassembled in one pe bag

UNIT:mm	TITLE: M12 A-SHLD, SCREW CABLE W/O SR, M, M, F1 IDC		ITEM NO	DRAWN BY: Yunchen	DATE: 2026/06/10
TOLERANCE .X ±0.25, .XX ±0.1, .XXX ±0.05, ANGLES ±1°	SCALE: 1:1	SIZE: A4	SHEET 2 OF 3	DWG NO: MSAS-XXBMMD-SL8001	CHECKED BY: Wen / DATE: 2026/06/10
	REV.: D	WC-REV.: .0	QC: Inspection item	CUSTOMER: ALTW	APPROVED BY: Aric / DATE: 2026/06/10

Amphenol LTW
安費諾亮泰企業股份有限公司

THIS DOCUMENT IS SUBJECT TO CHANGE WITHOUT NOTICE. IT IS CONFIDENTIAL AND A PROPERTY OF Amphenol LTW. DISCLOSURE TO THIRD PARTY HAS TO BE AUTHORIZED BY Amphenol LTW.

W10814-03-[redacted]01A2

D

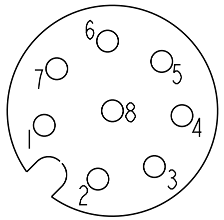

8P

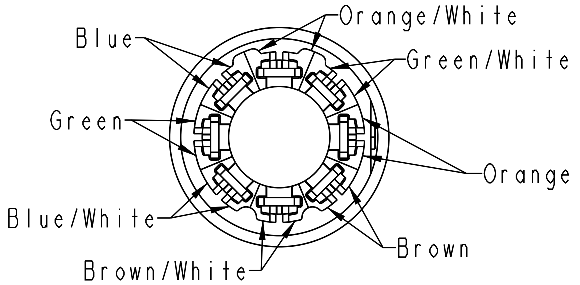

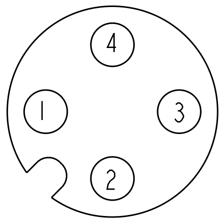

4P

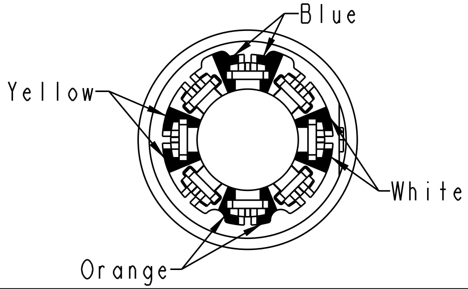

Pin Assignments
Front View

View A

UNIT:mm	TITLE: M12 A-SHLD, SCREW CABLE W/O SR, M, M, FI IDC	Amphenol LTW 安費諾亮泰企業股份有限公司	ITEM NO	DRAWN BY: Yunchen / DATE: 2026/06/10
TOLERANCE	SCALE: 1:1 / SIZE: A4 / SHEET 3 OF 3		DWG NO: MSAS-XXBMMD-SL8001	CHECKED BY: Wen / DATE: 2026/06/10
	REV.: D / WC-REV.: .0 / QC: Inspection item		CUSTOMER: ALTW	APPROVED BY: Aric / DATE: 2026/06/10

THIS DOCUMENT IS SUBJECT TO CHANGE WITHOUT NOTICE. IT IS CONFIDENTIAL AND A PROPERTY OF Amphenol LTW. DISCLOSURE TO THIRD PARTY HAS TO BE AUTHORIZED BY Amphenol LTW.

W10814-03-