REV.	ECN NO.	DATE	SIGN	DESCRIPTION
F	C221890	2022/12/29	Vicky	F X1
G	C231037	2023/08/08	Vicky	G X1
H	C240699	2024/06/21	Vicky	H X2

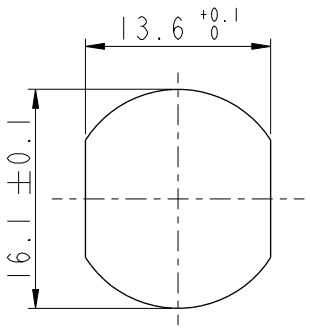

Recommended Panel Cut-Out

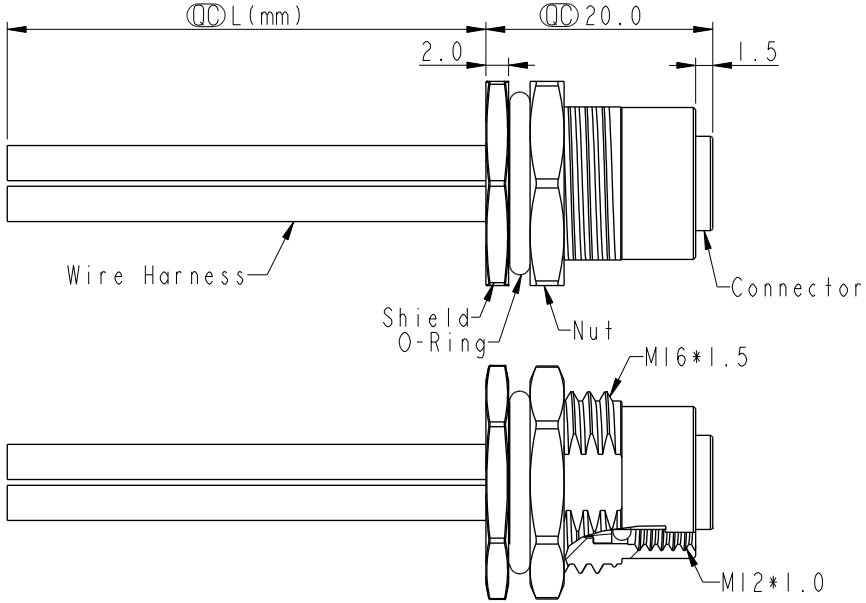

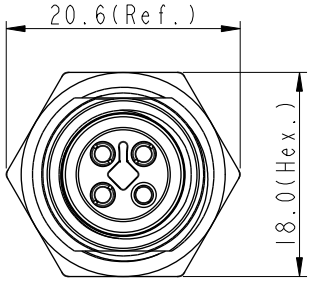

Pin #	Wire	
4	Black	黑
3	Blue	藍
2	White	白
1	Brown	棕

Pin Out

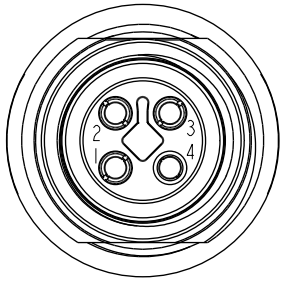

4P

Pin Assignments Front View

B C E
M12T-XXPFFS-SF8CXX

XX: No. Of Pin

H 15:150mm
20:200mm
∫
95:950mm
Cable Pitch Unit:50mm

A0:1000mm
∫
A5:1500mm
Cable Pitch Unit:100mm
Wire Length(L):150~1500mm

Note: B C D E
* RoHS Compliant
* QC Important dimension
F * Waterproof rate: IP68, unmated 1m/24h
G IP69K, mated
* Connector
  Housing: Thermoplastic, Black
  Pin: Copper alloy, Gold plated
  O-Ring: Rubber, Green
* Shield: Metal
* Nut: Metal
* O-Ring: Rubber, Black
* Wire harness: UL1015, 16AWG
* For panel thickness max: 4.5mm
* O-Ring and nut are assembled on connectors
H * Wire harness tolerance: 150mm < L ≦ 300mm: ±15mm
300mm < L ≦ 1000mm: ±20mm
1000mm < L ≦ 1500mm: +50/-0mm

UNIT:mm

TOLERANCE
.X ±0.25
.XX ±0.1
.XXX ±0.05
ANGLES ±1°

TITLE	N SEN, M12 T, SCREW RECEPTACLE, F, F, SOLDER C E		
SCALE 2:1	SIZE A4	SHEET 1 OF 1	
REV. H	WC-REV. A.1	QC:Inspection item	

Amphenol LTW
安費諾亮泰企業股份有限公司

ITEM NO	DRAWN BY Vicky	DATE 2024-06-21
DWG NO C M12T-XXPFFS-SF8CXX	CHECKED BY Rita	DATE 2024-06-21
CUSTOMER ALTW	APPROVED BY Fred	DATE 2024-06-21

THIS DOCUMENT IS SUBJECT TO CHANGE WITHOUT NOTICE. IT IS CONFIDENTIAL AND A PROPERTY OF Amphenol LTW. DISCLOSURE TO THIRD PARTY HAS TO BE AUTHORIZED BY Amphenol LTW.