REV.	ECN NO.	DATE	SIGN	DESCRIPTION
G	C221973	2022/12/26	Ruru	G XI
H	C231034	2023/08/09	Ruru	H XI
I	C251212	2025/09/26	Vicky	I XI

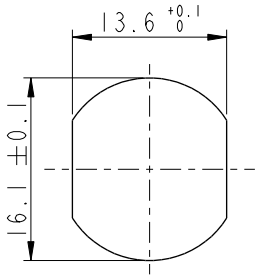

Recommended Panel Cut-Out

B

D MI2D-XXPMMS-SH8002

XX: No. Of Pin

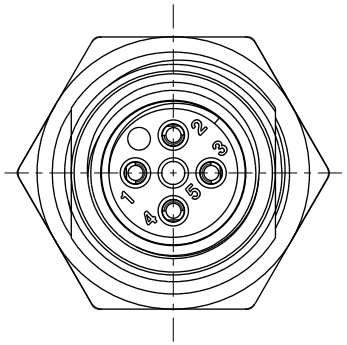

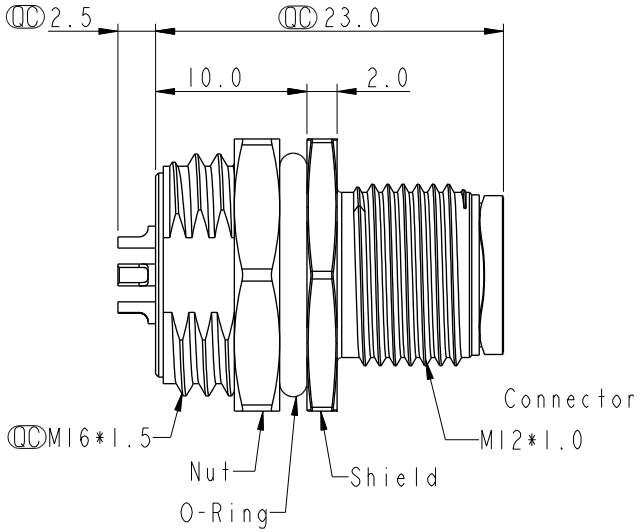

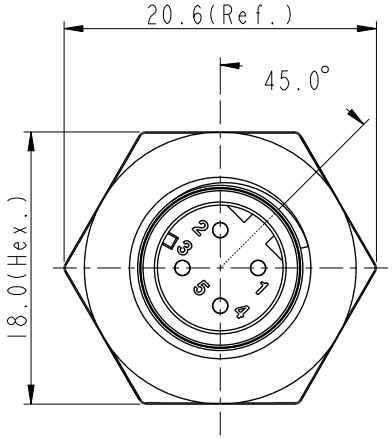

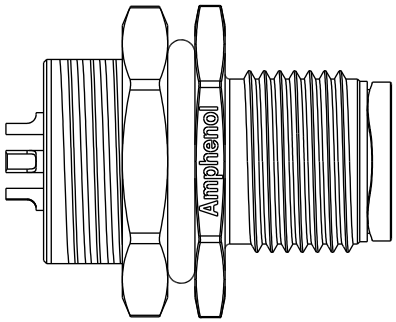

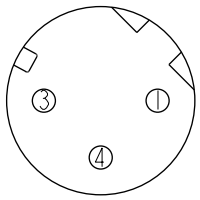

3P

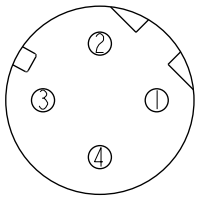

4P

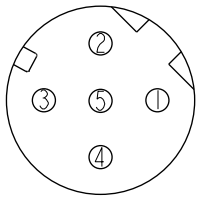

5P

C

Pin Assignment Front View

D F Note:
- * RoHS Compliant
- * QC Important dimension
- C G * Waterproof rate: IP68, unmated 1m/24h
  - H IP69K, mated
- * Connector
  - Housing: Thermoplastic, Black
  - Pin: Copper alloy, Gold plated
- E * Shield: Metal
- E * Nut: Metal
- * O-Ring: Rubber, Black
- * For panel thickness max: 4.5mm
- I * The Nut Is Packed Separately In The Bag

UNIT: mm

TOLERANCE

.X	±0.25
.XX	±0.1
.XXX	±0.05
ANGLES	±1°

TITLE	N SEN, M12 D, SCREW RECEPTACLE, M, M, SOLDER F		
SCALE 2:1	SIZE A4	SHEET 1 OF 1	
REV. 1	WC-REV. A.5	QC: Inspection item	

Amphenol LTW

安費諾亮泰企業股份有限公司

ITEM NO	DRAWN BY Vicky	DATE 2025-09-26
DWG NO D MI2D-XXPMMS-SH8002	CHECKED BY Ruru	DATE 2025-09-26
CUSTOMER ALTW	APPROVED BY Rita	DATE 2025-09-26

WI0814-03-RW01A2

THIS DOCUMENT IS SUBJECT TO CHANGE WITHOUT NOTICE. IT IS CONFIDENTIAL AND A PROPERTY OF Amphenol LTW. DISCLOSURE TO THIRD PARTY HAS TO BE AUTHORIZED BY Amphenol LTW.