| REV. | ECN NO. | DATE | SIGN | DESCRIPTION |
|---|---|---|---|---|
| E | C221973 | 2022/12/22 | Ruru | E XI |
| F | C231034 | 2023/08/08 | Ruru | F XI |
| G | C251374 | 2025/10/27 | Vicky | G XI |

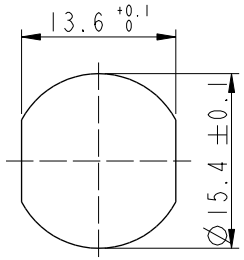


Recommended Panel Cut-Out

C
MI2B-XXPFFR-SF8001

XX: No. Of Pin

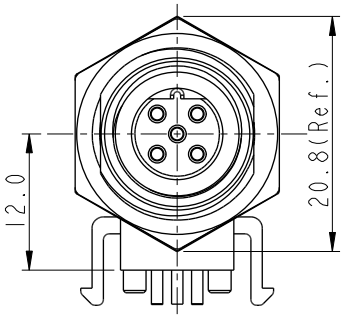


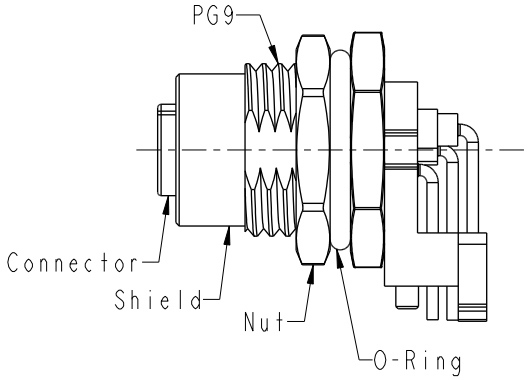


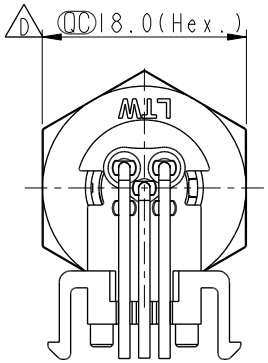


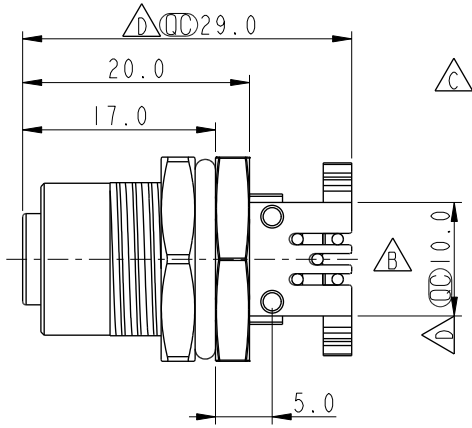


C D Note:
- * RoHS Compliant
- * QC Important dimension
- E * Waterproof rate: IP68, unmated 1m/24h
  - F IP69K, mated
- * Connector
  - Housing: Thermoplastic, Black
  - Pin: Copper alloy, Gold plated
  - O-Ring: Rubber, Gray
- * Shield: Metal
- * Nut: Metal
- * O-Ring: Rubber, Black
- * For panel thickness max: 4.5mm
- * For pcb thickness max: 1.6mm
- G * The Nut Is Packed Separately In The Bag

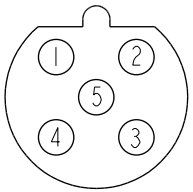


5P

Pin Assignment Front View

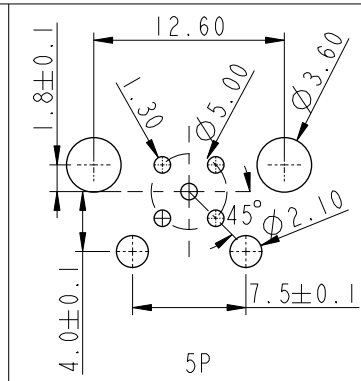


5P

PCB Layout

UNIT: mm

TOLERANCE
.X ±0.25
.XX ±0.1
.XXX ±0.05
ANGLES ±1°

TITLE: N SEN, MI2 B, SCREW RECEPTACLE, F, F, PCB R C

SCALE 3:2 | SIZE A4 | SHEET 1 OF 1

REV. G | WC-REV. A.1 | QC: Inspection item

**Amphenol LTW**
安費諾亮泰企業股份有限公司

| | | |
|---|---|---|
| ITEM NO | DRAWN BY: Vicky | DATE: 2025-10-27 |
| DWG NO: C MI2B-XXPFFR-SF8001 | CHECKED BY: Ruru | DATE: 2025-10-27 |
| CUSTOMER: ALTW | APPROVED BY: Rita | DATE: 2025-10-27 |

WI0814-03-RW01A2

THIS DOCUMENT IS SUBJECT TO CHANGE WITHOUT NOTICE. IT IS CONFIDENTIAL AND A PROPERTY OF Amphenol LTW. DISCLOSURE TO THIRD PARTY HAS TO BE AUTHORIZED BY Amphenol LTW.