REV.	ECN NO.	DATE	SIGN	DESCRIPTION
G	C231034	2023/08/08	Ruru	G XI
H	C241122	2024/10/29	Henry	H XI
I	C251374	2025/10/27	Vicky	I XI

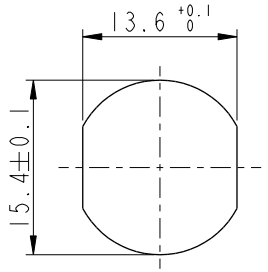

Recommended Panel Cut-Out

B D H

C D

M12B-XXPFFP-SF8001

XX: No. Of Pin

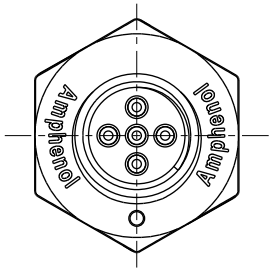

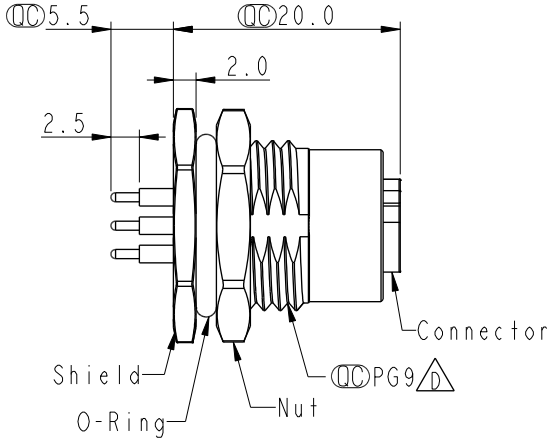

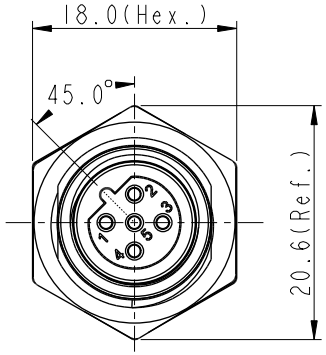

C

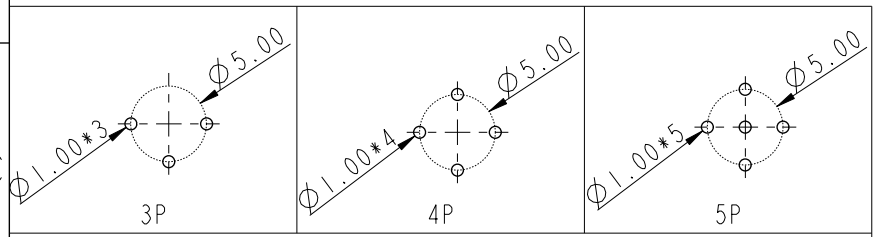

PCB Layout

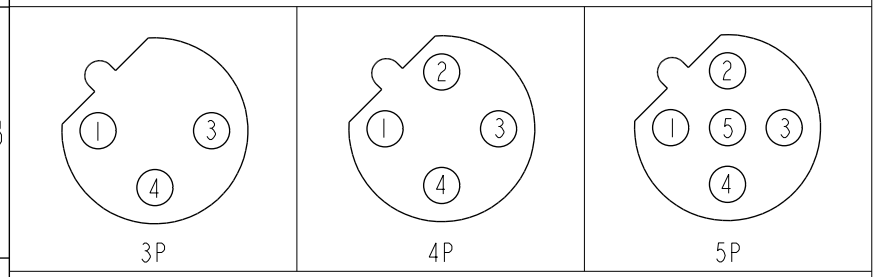

Pin Assignment Front View

D E Note:
- * RoHS Compliant
- * QC Important dimension
- C F * Waterproof rate: IP68, unmated 1m/24h
  - G IP69K, mated
- * Connector
  - Housing: Thermoplastic, Black
  - Pin: Copper alloy, Gold plated
  - O-Ring: Rubber, Green
- * Shield: Metal
- * Nut: Metal
- * O-Ring: Rubber, Black
- * For panel thickness max: 4.5mm
- I * The Nut Is Packed Separately In The Bag

UNIT: mm

TOLERANCE
.X ±0.25
.XX ±0.1
.XXX ±0.05
ANGLES ±1°

TITLE: N SEN, M12 B, SCREW RECEPTACLE, F, F, PCB S E			
SCALE 3:2	SIZE A4	SHEET 1 OF 1	
REV. 1	WC-REV. A.5	QC: Inspection item	

Amphenol LTW
安費諾亮泰企業股份有限公司

ITEM NO	DRAWN BY Vicky	DATE 2025-10-27
DWG NO D M12B-XXPFFP-SF8001	CHECKED BY Ruru	DATE 2025-10-27
CUSTOMER ALTW	APPROVED BY Rita	DATE 2025-10-27

THIS DOCUMENT IS SUBJECT TO CHANGE WITHOUT NOTICE. IT IS CONFIDENTIAL AND A PROPERTY OF Amphenol LTW. DISCLOSURE TO THIRD PARTY HAS TO BE AUTHORIZED BY Amphenol LTW.