REV.	ECN NO.	DATE	SIGN	DESCRIPTION
A		2023/10/11	Sam Ho	Rev.01 to A, Initial Released
B	C231401	2023/11/17	Sam Ho	△B X1
C	C251374	2025/10/27	Vicky	△C X1

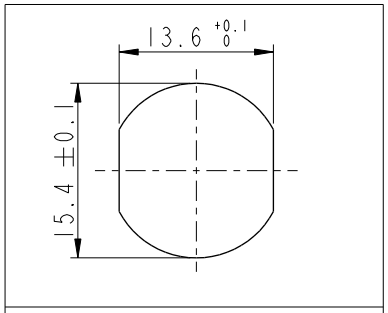

Recommended Panel Cut-Out

△B HDM12A-XXPMMP-SF8001

XX: No. Of Pin

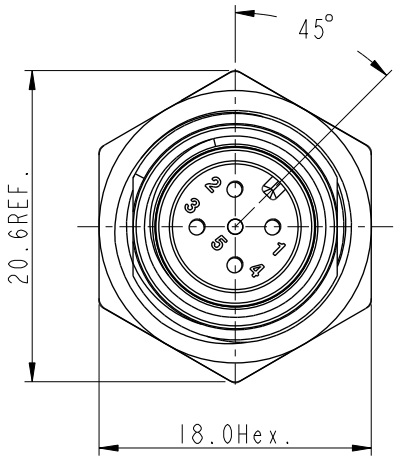

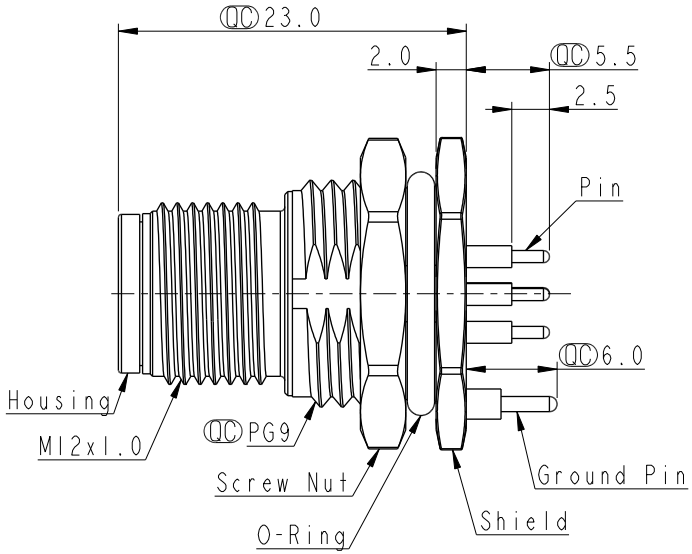

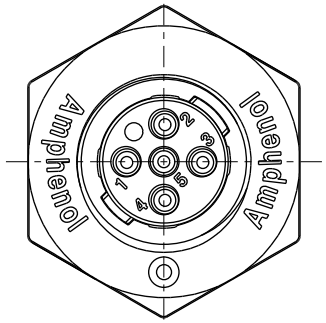

Note:
* RoHS Compliant
* QC Important dimension
* Waterproof rate: IP68, unmated 1m/24h
  IP69K, mated
* Connector
  Housing: Thermoplastic, Black
  Pin: Copper alloy, Gold plated
* Shield: Metal
* Screw Nut: Metal
* Ground Pin: Metal
* O-Ring: Rubber, Black
* For panel thickness max: 4.5mm
* △C The Nut Is Packed Separately In The Bag

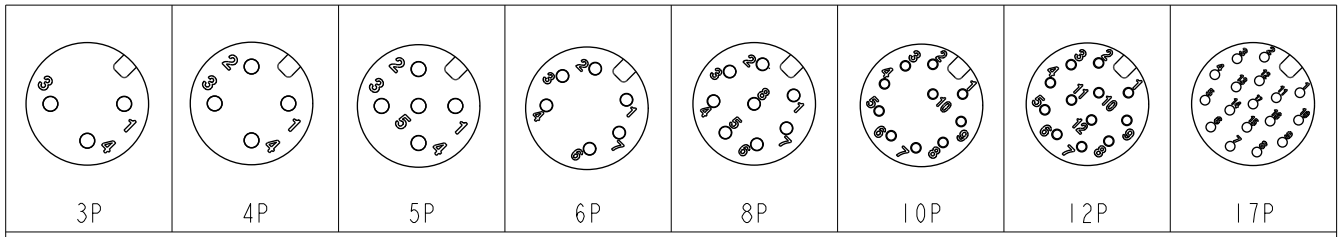

Pin Assignment Front View

UNIT: mm

TOLERANCE
.X ±0.25
.XX ±0.1
.XXX ±0.05
ANGLES ±1°

TITLE: N SEN, HDMI2 A-240H, HT, SCREW RECEPTACLE, M, M, PCB S

SCALE: 2:1 | SIZE: A4 | SHEET: 1 OF 2

REV.: C | WC-REV.:

QC: Inspection item

Amphenol LTW

安費諾亮泰企業股份有限公司

ITEM NO	DRAWN BY: Vicky	DATE: 2025-10-27
DWG NO: HDMI2A-XXPMMP-SF8001	CHECKED BY: Ruru	DATE: 2025-10-27
CUSTOMER: ALTW	APPROVED BY: Rita	DATE: 2025-10-27

W10814-03-RW01A2

THIS DOCUMENT IS SUBJECT TO CHANGE WITHOUT NOTICE. IT IS CONFIDENTIAL AND A PROPERTY OF Amphenol LTW. DISCLOSURE TO THIRD PARTY HAS TO BE AUTHORIZED BY Amphenol LTW.

THIS DOCUMENT IS SUBJECT TO CHANGE WITHOUT NOTICE. IT IS CONFIDENTIAL AND A PROPERTY OF Amphenol LTW. DISCLOSURE TO THIRD PARTY HAS TO BE AUTHORIZED BY Amphenol LTW.

PCB Layout

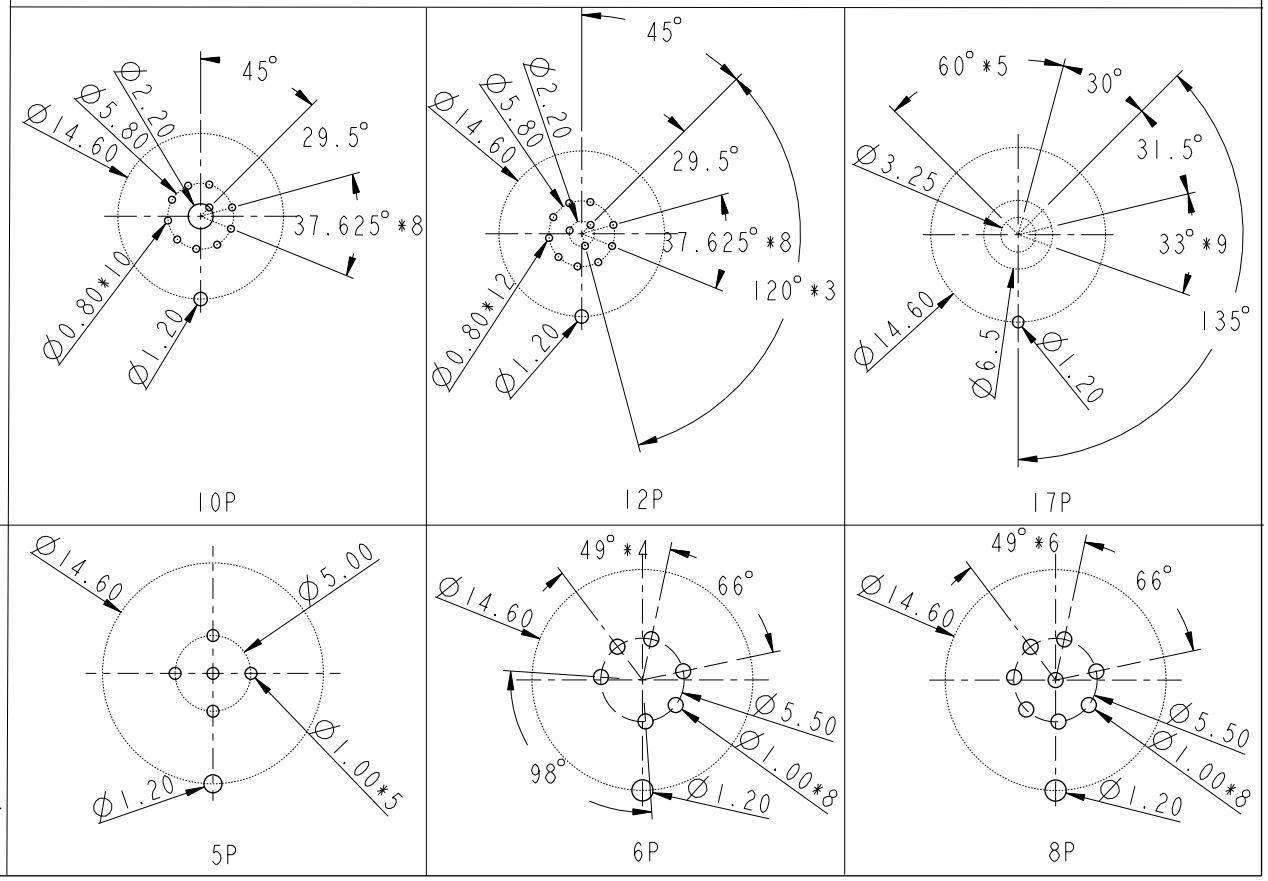

UNIT: mm

TOLERANCE

.X	±0.25
.XX	±0.1
.XXX	±0.05
ANGLES	±1°

TITLE	N SEN, HDMI2 A-240H, HT, SCREW RECEPTACLE, M, M, PCB S		
SCALE 2:1	SIZE A4	SHEET 2 OF 2	
REV. C	WC-REV.	QC: Inspection item	

Amphenol LTW

安費諾亮泰企業股份有限公司

ITEM NO		DRAWN BY Vicky	DATE 2025-10-27
DWG NO HDMI2A-XXPMMP-SF8001		CHECKED BY Ruru	DATE 2025-10-27
CUSTOMER ALTW		APPROVED BY Rita	DATE 2025-10-27

W10814-03-RW01A2