REV.	ECN NO.	DATE	SIGN	DESCRIPTION
D	C190273	2019/03/13	Ruru	Modify Note
E	C241282	2024/11/07	Ruru	E X2

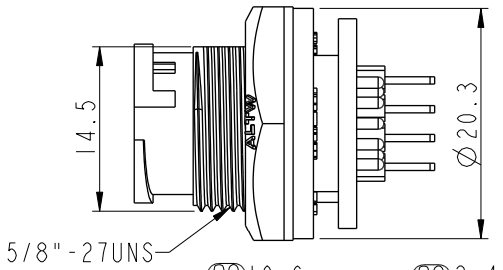

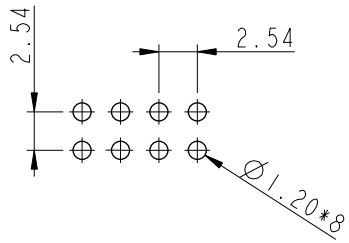

8 Pin Male Connector
Male Pin PCB Layout

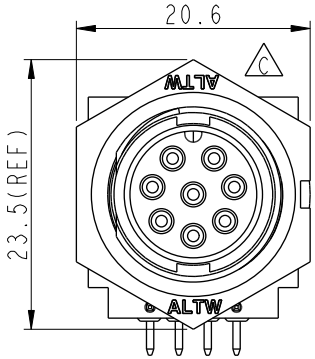

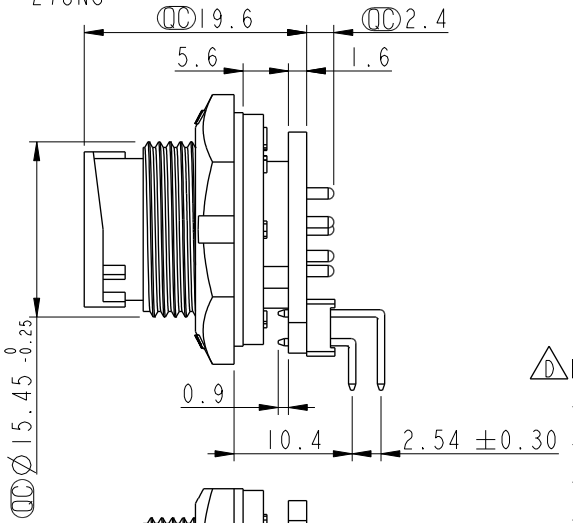

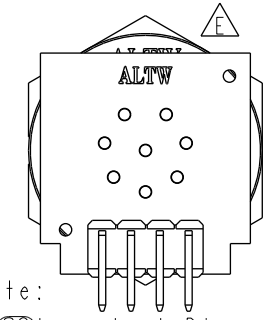

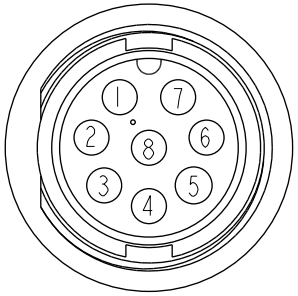

Pin Assignments
Front View

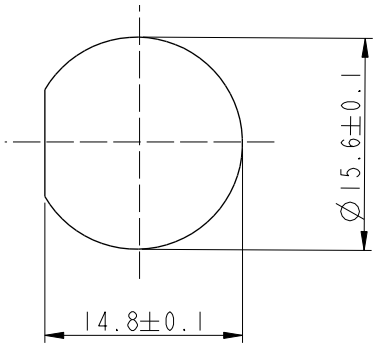

Recommended Panel Cut-out

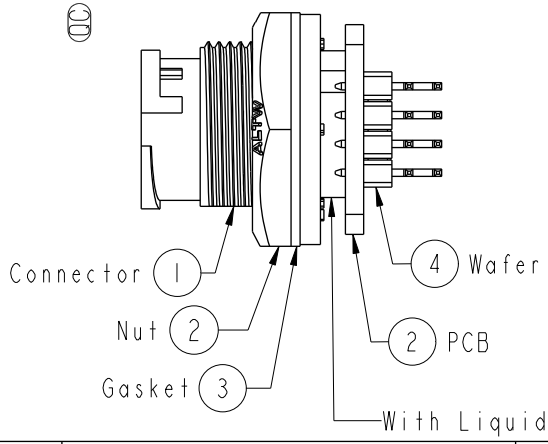

D Note:
* QC Important Dimension To Check.
* Waterproof Rate: IP67, Unmated
* Housing: Thermoplastic, Black
* Pin: Copper Alloy, Gold Plated
* Nut: Thermoplastic, Black
* Gasket: Rubber, Black
* PCB: FR4 EPOXY Glass
* Wafer: PH=2.54 雙排,90°
B * Use With Waterproof Cap Or Dust Cap
Panel Thickness Max: 3.0mm
B * Use Without Waterproof Cap Or Dust Cap
Panel Thickness Max: 4.5mm
* Gasket and Nut are packed separately in PE bags.

UNIT: mm

TOLERANCE
.X ±0.25
.XX ±0.1
.XXX ±0.05
ANGLES ±1°

TITLE: 0 CERES, B-5A, 08P, FRONT FASTENED M, M, PCB R, 2LOCK E

SCALE 1:1 | SIZE A4 | SHEET 1 OF 1
REV. E | WC-REV. A.5 | QC: Inspection item

Amphenol LTW
安費諾亮泰企業股份有限公司

ITEM NO BD-08PMMR-LC7001	DRAWN BY Ruru	DATE 2024-11-07
DWG NO BD-08PMMR-LC7001	CHECKED BY Rita	DATE 2024-11-07
CUSTOMER ALTW	APPROVED BY Fred	DATE 2024-11-07

W10814-03-[redacted]01A2

THIS DOCUMENT IS SUBJECT TO CHANGE WITHOUT NOTICE. IT IS CONFIDENTIAL AND A PROPERTY OF Amphenol LTW. DISCLOSURE TO THIRD PARTY HAS TO BE AUTHORIZED BY Amphenol LTW.