REV.	ECN NO.	DATE	SIGN	DESCRIPTION
B	LE314C0013	2014/11/21	Vicky	Update Logo & Dimension
C	C251612	2025/12/11	Vicky	C X2

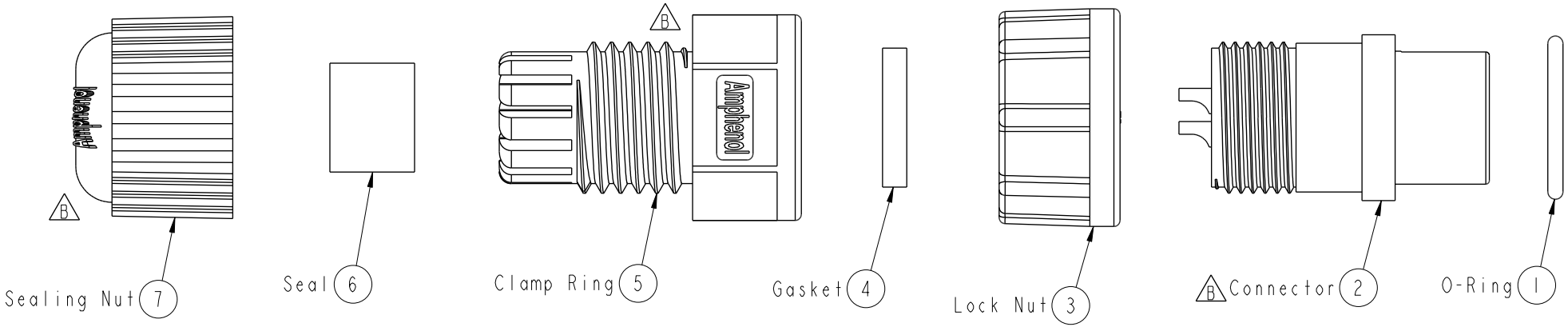

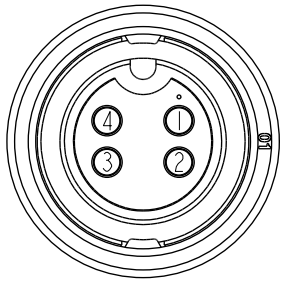

Pin Assignments
Front View

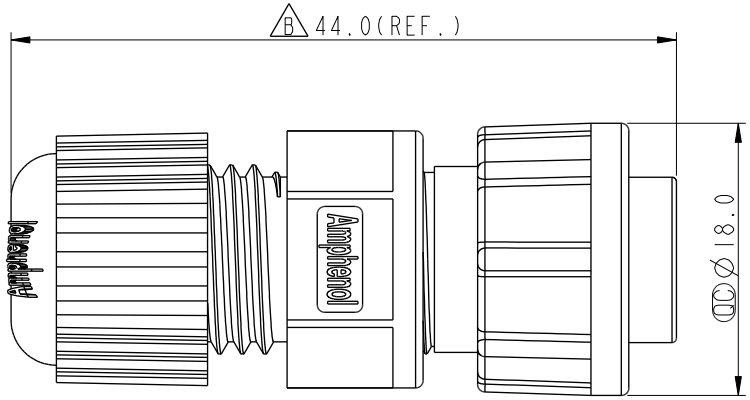

Note:
* QC Important Dimension To Check.
* Waterproof Rate: IP67
* Housing: Nylon+GF, Black
* Male Pin: Copper Alloy, Gold Plated
* O-Ring: EPDM, Black
* Lock Nut: Nylon+GF, Black
* Gasket: EPDM, Black
* Clamp Ring: Nylon, Black
* Seal: EPDM, Black
* Sealing Nut: Nylon, Black
* Seal For Cable OD: ∅4.5mm~∅6.5mm
(防水墊圈線徑:∅4.5mm~∅6.5mm)
C * The Connector Is Not Assembled, And The Parts Are Packed In A Bag

UNIT:mm

TOLERANCE
.X ±0.25
.XX ±0.1
.XXX ±0.05
ANGLES ±1°

TITLE: O CERES, B-5A, 04P, CABLE W/O SR F, M, F1 SOLDER, 2LOCK C

SCALE: 2:1 | SIZE: A4 | SHEET 1 OF 1
REV.: C | WC-REV.: A.3 | QC: Inspection item

Amphenol LTW
安費諾亮泰企業股份有限公司

ITEM NO: BD-04BFMA-LL7001	DRAWN BY: Vicky	DATE: 2025-12-11
DWG NO: BD-04BFMA-LL7001	CHECKED BY: Ruru	DATE: 2025-12-11
CUSTOMER: ALTW	APPROVED BY: Rita	DATE: 2025-12-11

THIS DOCUMENT IS SUBJECT TO CHANGE WITHOUT NOTICE. IT IS CONFIDENTIAL AND A PROPERTY OF Amphenol LTW. DISCLOSURE TO THIRD PARTY HAS TO BE AUTHORIZED BY Amphenol LTW.