REV.	ECN NO.	DATE	SIGN	DESCRIPTION
B	LEN-0C0532~535	2010/11/29	Ivan	Change View
C	LEN1660068~071	2016/05/27	Ruru	Change Logo

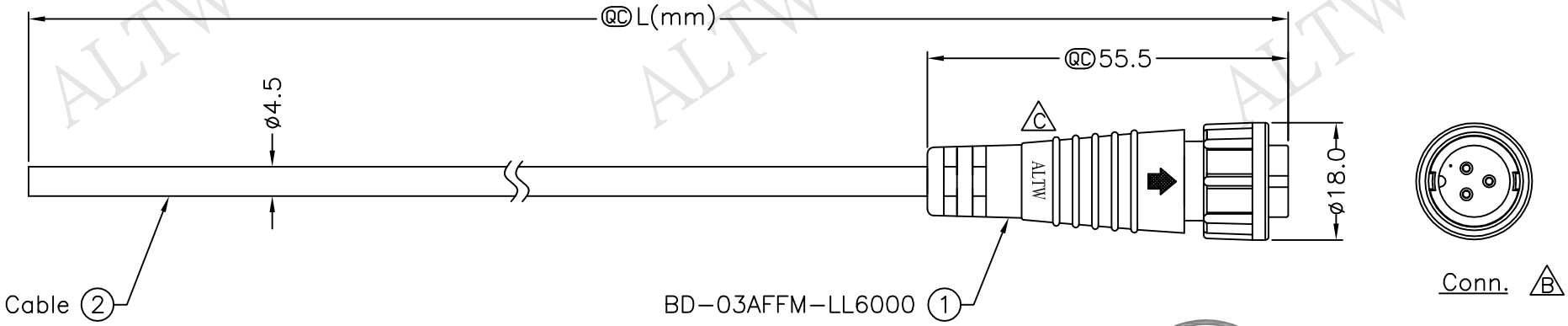

ALTW DCC. DEPT. CONFIDENTIAL 2016.06.03 ISSUED

ALTW CONFIDENTIAL 2016.05.27 R&D DEPT.

BD-03AFFM-LL6AXX

XX:01~99Meter
01:01Meter
02:02Meters
:
:
99:99Meters

C Cable Length(L):01~99Meters

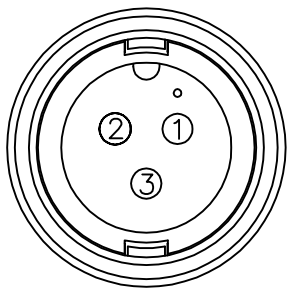

Pin Assignments
Front View

Conn.	Wire Color
3	Black 黑
2	Blue 藍
1	Brown 棕

Pin Out

Note:
* QC Important Dimension To Check.
* Waterproof Rate: IP66
* Housing: Nylon+GF, Black.
* Pin: Copper Alloy, Gold Plated
* Cable: UL2464 24AWG*3C+D+Al/My PVC Jacket (UV Resistant) OD=4.5,Black
* Cable Length Tolerance:01M:±40mm
  02M~05M:±60mm
  06M~10M:±100mm
  11M~30M:±200mm
  31M~99M:±500mm

UNIT:mm	TITLE: Standard Cable Lock 3Pin F Conn. F Pin	Amphenol LTW 安費諾亮泰企業股份有限公司	ITEM NO:
TOLERANCE: ±0.5 mm	SCALE: Free / SHEET: 1 OF 1		DWG NO: BD-03AFFM-LL6AXX
	REV.: C / SIZE: A4 / QC :Inspection Item		CUSTOMER: ALTW

DRAWN BY: Ruru	DATE: 2016/05/27	
CHECKED BY: Rita	DATE: 2016/05/27	
APPROVED BY: Lisa	DATE: 2016/05/27	

THIS DOCUMENT IS SUBJECT TO CHANGE WITHOUT NOTICE. IT IS CONFIDENTIAL AND A PROPERTY OF Amphenol LTW. DISCLOSURE TO THIRD PARTY HAS TO BE AUTHORIZED BY Amphenol LTW.