REV.	ECN NO.	DATE	SIGN	DESCRIPTION
B	LEN-8B0423~426	2008/09/10	Shin	Add Note
C	LEN1610184~189	2015/12/07	Ruru	Change Logo & Note
D	LEN1790384~389	2017/09/27	Ruru	Update View

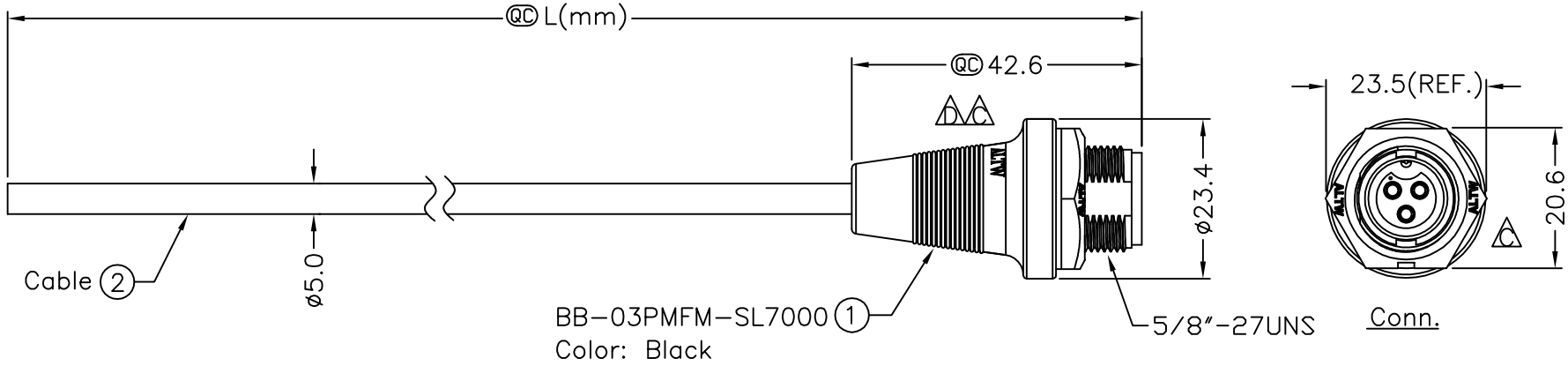

ALTW CONFIDENTIAL 2017.09.27 R&D DEPT.

ALTW DCC. DEPT. CONFIDENTIAL 2017.10.02 ISSUED

BB-03PMFM-SL7AXX

XX :01~99Meter
01 :01Meter
02 :02Meters
:
:
99 :99Meters
Cable Length(L):01~99Meters

Note:
* QC Important Dimensions To Check.
* Waterproof Rate: IP67
* Housing: Nylon+GF, Black
* Pin: Copper Alloy, Gold Plated
* Cable: UL2464 20AWG*3C+Al/My, PVC Jacket UV Resistant, OD=5.0mm, Black
* For Panel Thickness Max 3.0m
B * Use with waterproof cap or dust cap Panel Thickness Max: 2.5mm
B * Use without waterproof cap or dust cap Panel Thickness Max: 3.5mm
C * Cable Length Tolerance: 01M: ±40mm
02M~05M: ±60mm
06M~10M: ±100mm
11M~30M: ±200mm
31M~99M: ±500mm

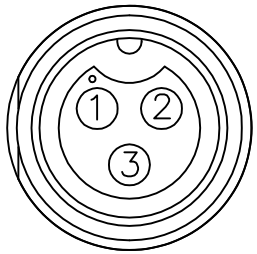

Pin Assignments
Front View

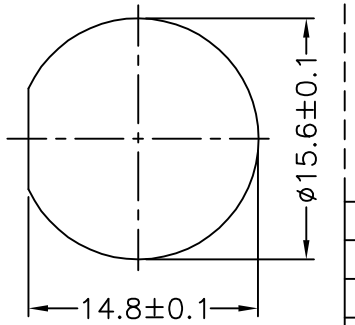

Recommended Panel Cut-Out

Conn.	Wire Color	
3	Yellow	黃
2	White	白
1	Black	黑

Pin Out

UNIT:mm	TITLE: Standard Cable Screw 3Pin M Conn F Pin	ITEM NO	DRAWN BY: Ruru / DATE: 2017/09/27
TOLERANCE: ±0.5 mm	SCALE: Free / SHEET: 1 OF 1	DWG NO: BB-03PMFM-SL7AXX	CHECKED BY: Rita / DATE: 2017/09/27
	REV.: D / SIZE: A4 / QC :Inspection Item	CUSTOMER: ALTW	APPROVED BY: Max / DATE: 2017/09/27

Amphenol LTW
安費諾亮泰企業股份有限公司

THIS DOCUMENT IS SUBJECT TO CHANGE WITHOUT NOTICE. IT IS CONFIDENTIAL AND A PROPERTY OF Amphenol LTW. DISCLOSURE TO THIRD PARTY HAS TO BE AUTHORIZED BY Amphenol LTW.