REV.	ECN NO.	DATE	SIGN	DESCRIPTION
E	C230086	2023/01/31	Ruru	E XI
F	C250842	2025/06/26	Vicky	F XI
G	C251092	2025/09/04	Zed	G XI

D

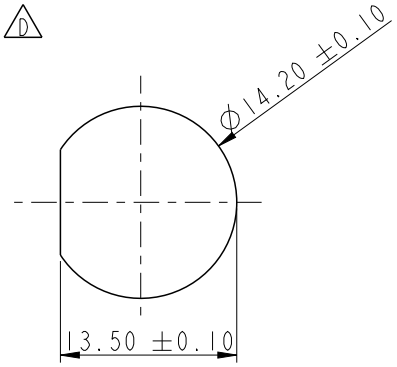

Recommended
Panel Cut-out

G

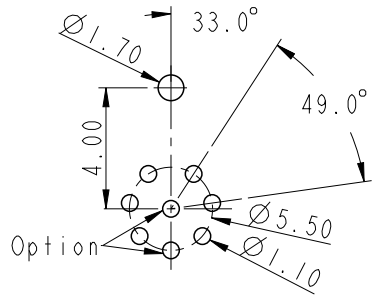

Recommended PCB Layout
Tolerance ±0.05
ANGLES ±1°

C

AU-XXPMMP-QC8001

XX: No. Of Pin

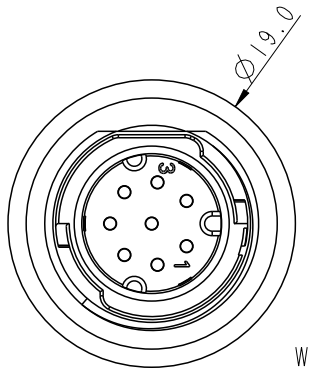

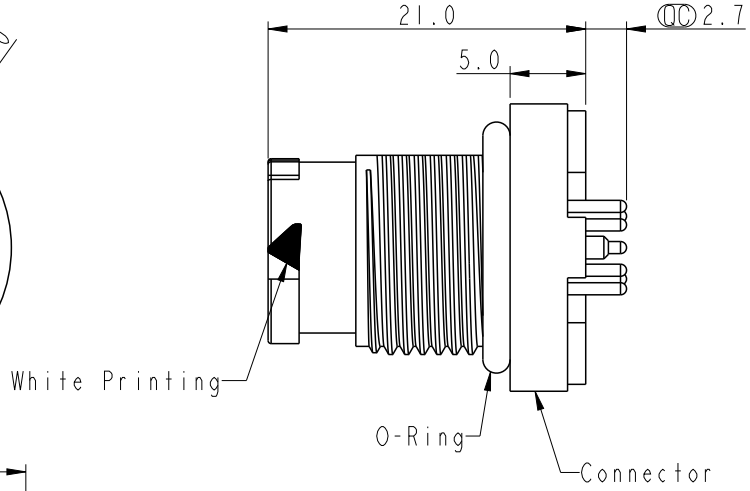

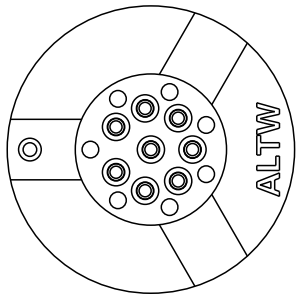

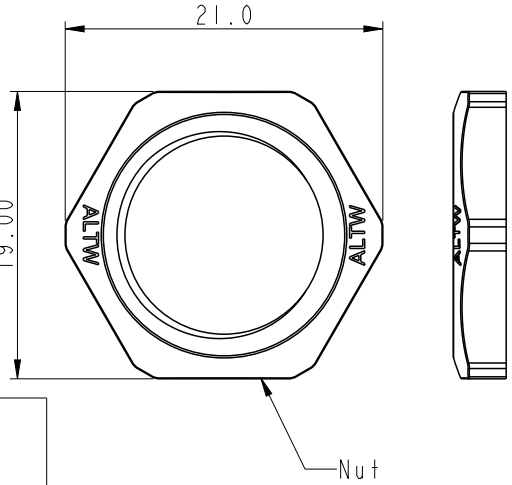

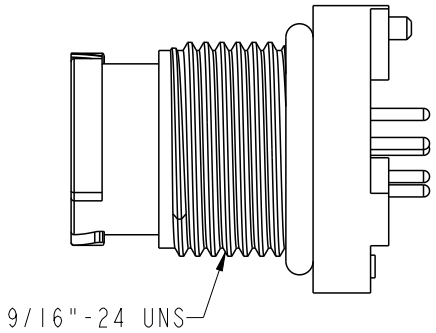

Note: B C
* RoHS Compliant
* QC Important dimension
E * Waterproof rate: IP68, unmated 1m/24h
* Connector
  Housing: Thermoplastic, Black
  Pin: Copper alloy, Gold plated
* Nut: Thermoplastic, Black
* O-Ring: Rubber, Gray
* Use with waterproof cap or dust cap
  Panel thickness max: 3.0mm
* Use without waterproof cap or dust cap
  Panel thickness max: 4.0mm
* For pcb thickness max: 2.0mm
F * Nuts are packed separately in one bag

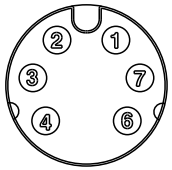

6P

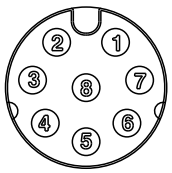

8P

Pin Assignment Front View

UNIT: mm	TITLE: XLOK, A-2A, FRONT FASTENED M, M, PCB S, PUSH LOCK C	Amphenol LTW 安費諾亮泰企業股份有限公司	ITEM NO	DRAWN BY: Zed	DATE: 2025/09/04
TOLERANCE ±0.25mm	SCALE 2:1 / SIZE A4 / SHEET 1 OF 1		DWG NO: AU-XXPMMP-QC8001 C	CHECKED BY: YunChen	DATE: 2025/09/04
	REV. G / WC-REV. A.5	QC: Inspection item	CUSTOMER: ALTW	APPROVED BY: Aric	DATE: 2025/09/04

THIS DOCUMENT IS SUBJECT TO CHANGE WITHOUT NOTICE. IT IS CONFIDENTIAL AND A PROPERTY OF Amphenol LTW. DISCLOSURE TO THIRD PARTY HAS TO BE AUTHORIZED BY Amphenol LTW.