407-BBOZ-C

Dell® 407-BBOZ Compatible TAA 40GBase-SR4 QSFP+ Transceiver (MMF, 850nm, 150m, MPO, DOM)

Features:

- SFF-8436 Compliance
- MPO Connector
- Multi-mode Fiber
- Commercial Temperature 0 to 70 Celsius
- Hot Pluggable
- Metal with Lower EMI
- Excellent ESD Protection
- RoHS Compliant and Lead Free

Applications:

- 40GBase Ethernet
- 4x10G Breakout Option
- Access and Enterprise

Product Description

This Dell® 407-BBOZ compatible QSFP+ transceiver provides 40GBase-SR4 throughput up to 150m over multi-mode fiber (MMF) using a wavelength of 850nm via an MPO connector. Our transceiver is built to meet or exceed OEM specifications and is guaranteed to be 100% compatible with Dell®. It has been programmed, uniquely serialized, and tested for data-traffic and application to ensure that it will initialize and perform identically. All of our transceivers comply with Multi-Source Agreement (MSA) standards to provide seamless network integration. Additional product features include Digital Optical Monitoring (DOM) support which allows access to real-time operating parameters. This transceiver is Trade Agreements Act (TAA) compliant. We stand behind the quality of our products and proudly offer a limited lifetime warranty.

ProLabs' transceivers are RoHS compliant and lead-free.

TAA refers to the Trade Agreements Act (19 U.S.C. & 2501-2581), which is intended to foster fair and open international trade. TAA requires that the U.S. Government may acquire only "U.S.-made or designated country end products.")

Rev. 012026

Absolute Maximum Ratings

Parameter	Symbol	Min.	Typ.	Max.	Unit
Supply Voltage	Vcc	-0.5		4.0	V
Storage Temperature	Tstg	-40		85	°C
Operating Case Temperature	Tc	0	25	70	°C
Relative Humidity	RH	5		95	%
Data Rate Per Channel			10.3125		Gbps

Electrical Characteristics

Parameter	Symbol	Min.	Typ.	Max.	Unit	Notes
Supply Voltage	Vcc	3.135	3.3	3.465	V	
Module Supply Current	Icc			430	mA	
Power Dissipation	P_{DISS}			1.5	W	
Transmitter						
Input Differential Impedance	ZIN		100		Ω	
Differential Data Input Swing	VIN,pp	180		900	mVp-p	
Receiver						
Output Differential Impedance	ZOUT		100		Ω	
Differential Data Output Swing	VOUT,pp	300		850	mVp-p	1
Data Output Rise Time/Fall Time	Tr/Tf	28			ps	2

Notes:

1. Internally AC coupled but requires an external 100Ω differential load termination.
2. 20 – 80 %.

Optical Characteristics

Parameter	Symbol	Min.	Typ.	Max.	Unit	Notes
Transmitter						
Launch Optical Power	Po	-7.6		+2.4	dBm	1
Center Wavelength Range	λC	830	850	860	nm	
Extinction Ratio	ER	3			dB	2
Spectral Width (RMS)	Δλ			0.65	nm	
Transmitter and Dispersion Penalty	TDP			3.2	dB	
Optical Return Loss Tolerance	ORLT			12	dB	
Eye Diagram	IEEE Std 802.3ba Compatible					
Receiver						
Center Wavelength	λC	830	850	860	nm	
Receiver Sensitivity (P_{avg})	S			-9.5	dBm	3
Damage Threshold	P_{OL}	2.5			dBm	3
Optical Return Loss	ORL	12			dB	
LOS Assert	LOSA	-30			dBm	
LOS De-Assert	LOSD			-11	dBm	
LOS Hysteresis		0.5			dB	

Notes:

1. The optical power is launched into OM3 MMF.
2. Measured with a PRBS 2^{31}-1 test pattern @10.3125Gbps.
3. Measured with PRBS 2^{31}-1 test pattern, 10.3125Gbps, and BER<10^{-12}.

Pin Descriptions

Pin	Logic	Symbol	Name/Descriptions	Notes
1		GND	Module Ground.	1
2	CML-I	Tx2-	Transmitter Inverted Data Input.	
3	CML-I	Tx2+	Transmitter Non-Inverted Data Input.	
4		GND	Module Ground.	1
5	CML-I	Tx4-	Transmitter Inverted Data Input.	
6	CML-I	Tx4+	Transmitter Non-Inverted Data Input.	
7		GND	Module Ground.	1
8	LVTTL-I	ModSelL	Module Select.	2
9	LVTTL-I	ResetL	Module Reset.	2
10		VccRx	+3.3V Receiver Power Supply.	
11	LVCMOS-I	SCL	2-Wire Serial Interface Clock.	2
12	LVCMOS-I/O	SDA	2-Wire Serial Interface Data.	2
13		GND	Module Ground.	1
14	CML-O	Rx3+	Receiver Non-Inverted Data Output.	
15	CML-O	Rx3-	Receiver Inverted Data Output.	
16		GND	Module Ground.	1
17	CML-O	Rx1+	Receiver Non-Inverted Data Output.	
18	CML-O	Rx1-	Receiver Inverted Data Output.	
19		GND	Module Ground.	1
20		GND	Module Ground.	1
21	CML-O	Rx2-	Receiver Inverted Data Output.	
22	CML-O	Rx2+	Receiver Non-Inverted Data Output.	
23		GND	Module Ground.	1
24	CML-O	Rx4-	Receiver Inverted Data Output.	1
25	CML-O	Rx4+	Receiver Non-Inverted Data Output.	
26		GND	Module Ground.	1
27	LVTTL-O	ModPrsL	Module Present. Internally pulled down to GND.	
28	LVTTL-O	IntL	Interrupt Output. Should be pulled up on the host board.	2
29		VccTx	+3.3V Transmitter Power Supply.	
30		Vcc1	+3.3V Power Supply.	
31	LVTTL-I	LPMode	Low-Power Mode.	2
32		GND	Module Ground.	1
33	CML-I	Tx3+	Transmitter Non-Inverted Data Input.	
34	CML-I	Tx3-	Transmitter Inverted Data Input.	

35		GND	Module Ground.	1
36	CML-I	Tx1+	Transmitter Non-Inverted Data Input.	
37	CML-I	Tx1-	Transmitter Inverted Data Input.	
38		GND	Module Ground.	1

Notes:

1. The module signal grounds are isolated from the module case.
2. This is an open collector/drain output that on the host board requires a 4.7kΩ-10kΩ pull-up resistor to the Host_Vcc.

Electrical Pin-Out Details

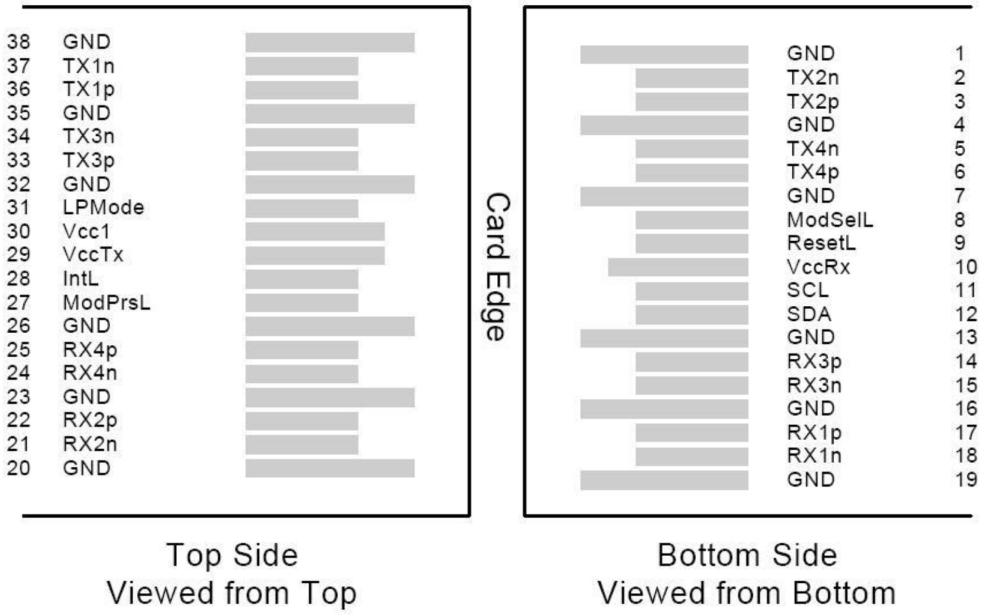

Recommended Host Board Power Supply Filter Network

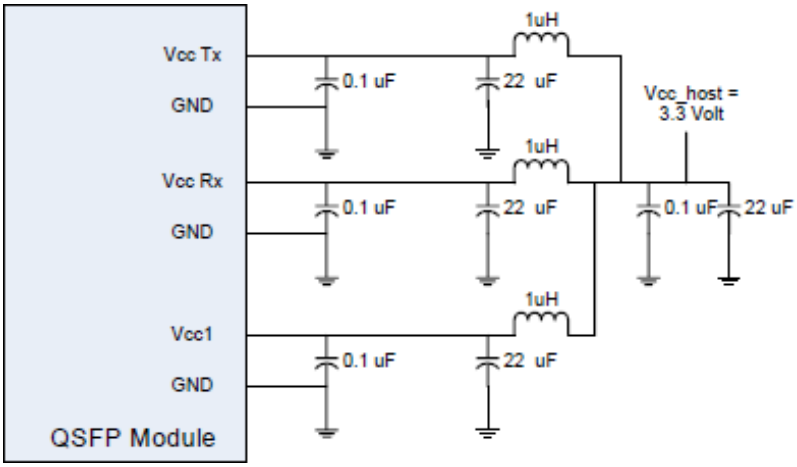

Mechanical Specifications

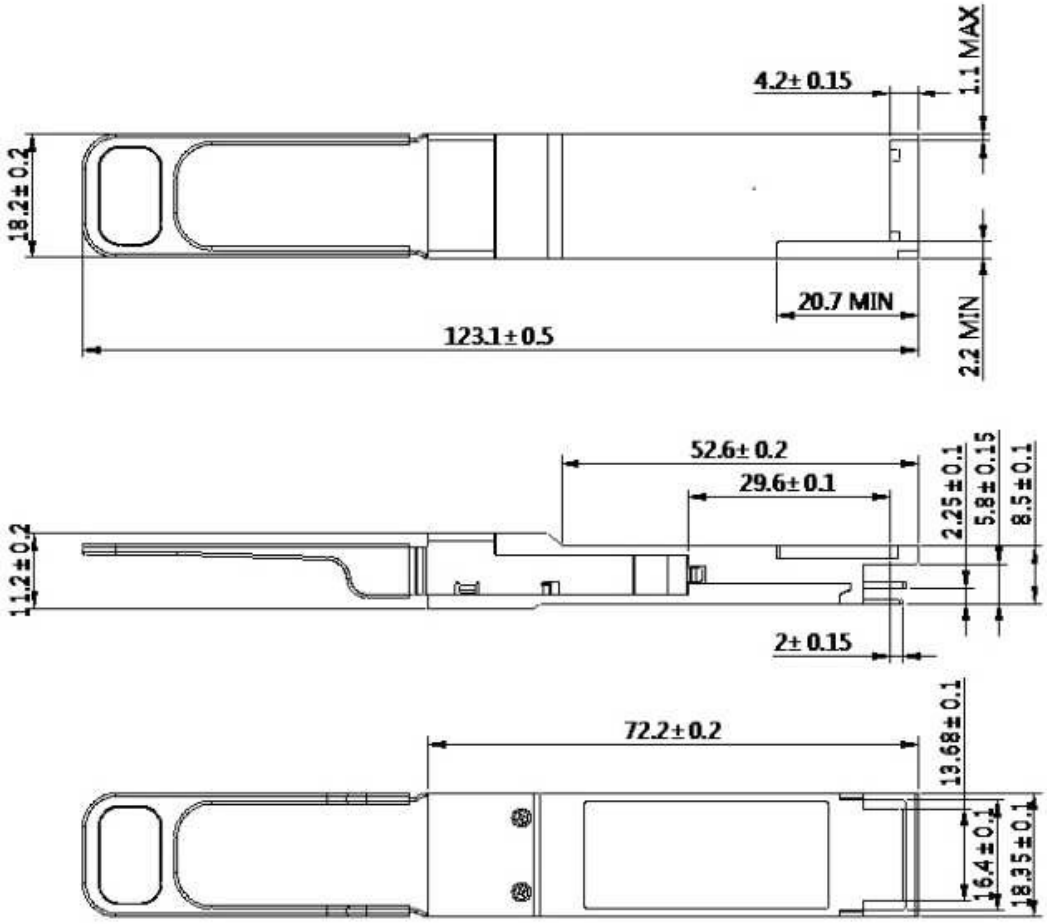

About ProLabs

Our extensive experience comes as standard. For over 20 years ProLabs has delivered optical connectivity solutions that give our customers freedom and choice through our ability to provide seamless interoperability. At the heart of our company is the ability to provide state-of-the-art optical transport and connectivity solutions that are compatible with more than 100 optical switching and transport platforms.

A Complete Portfolio of Network Solutions

ProLabs is focused on innovations in optical transport and connectivity. The combination of our knowledge of optics and networking equipment enables ProLabs to be your single source for optical transport and connectivity solutions from 100Mb to 1.6T while providing innovative solutions that increase network efficiency. We provide the optical connectivity expertise that is compatible with and enhances your switching and transport equipment.

The Trusted Partner

Customer service is our number one value. ProLabs has invested in people, labs and manufacturing capacity to ensure compatible products, and immediate answers to your questions. With Engineering and Manufacturing offices in the U.K. and U.S. augmented by field offices throughout the U.S., U.K. and Asia, ProLabs is able to be our customers best advocate 24 hours a day.

Contact Information

ProLabs US

Email: sales@prolabs.com
Telephone: 952-852-0252

ProLabs UK

Email: salessupport@prolabs.com
Telephone: +44 1285 719 600