1AB474800005-C

Alcatel-Lucent Nokia® 1AB474800005 Compatible TAA 100GbE/OTU-4/128G FC Multi-Rate SR4 QSFP28 Transceiver (MMF, 850nm, 100m, MPO, DOM)

Features:

- Supports 103.1Gbps and 112.2Gbps Aggregate Bit Rates
- Single 3.3V Power Supply and Power Dissipation < 3.5W
- Up to 70m Transmission on MMF OM3, and 100m Transmission on MMF OM4
- Hot-Pluggable QSFP28 Footprint
- Class 1 FDA and IEC60825-1 Laser Safety Compliant
- I2C Interface with Integrated Digital Diagnostic Monitoring
- Operating Temperature: 0C to 70C
- RoHS6 Compliant

Applications:

- 100GBase Ethernet
- Access and Enterprise

Product Description

This Alcatel-Lucent Nokia® 1AB474800005 compatible QSFP28 transceiver provides 100GbE/OTU-4/128G FC Fibre Channel throughput up to 100m over multi-mode fiber (MMF) using a wavelength of 850nm via an LC connector. It is guaranteed to be 100% compatible with the equivalent Alcatel-Lucent Nokia® transceiver. This easy to install, hot swappable transceiver has been programmed, uniquely serialized and data-traffic and application tested to ensure that it will initialize and perform identically. Digital optical monitoring (DOM) support is also present to allow access to real-time operating parameters. This transceiver is Trade Agreements Act (TAA) compliant. We stand behind the quality of our products and proudly offer a limited lifetime warranty.

ProLabs' transceivers are RoHS compliant and lead-free.

TAA refers to the Trade Agreements Act (19 U.S.C. & 2501-2581), which is intended to foster fair and open international trade. TAA requires that the U.S. Government may acquire only "U.S.-made or designated country end products.")

Rev. 011926

Absolute Maximum Ratings

Parameter	Symbol	Min.	Typ.	Max.	Unit
Supply Voltage	Vcc	-0.5		3.6	V
Storage Temperature	Ts	-40		+85	°C
Case Operating Temperature	Tc	0		70	°C
Operating Relative Humidity	RH	5		85	%

Notes:

1. Exceeding any one of these values may destroy the device immediately.

Electrical Characteristics

Parameter	Symbol	Min.	Typ.	Max.	Unit	Notes
Power Supply Voltage	V_{CC}	3.135	3.3	3.465	V	
Power Consumption	P			3.5	W	
Transmitter						
Input Amplitude (Differential)	Vin	150		1050	mVpp	AC coupled inputs
Input Impedance (Differential)	Zin	85	100	115	ohms	Rin > 100 kohms @ DC
Receiver						
Output Amplitude (Differential)	Vout	200		1100	mVpp	AC coupled outputs
Output Impedance (Differential)	Zout	85	100	115	ohms	
Output Rise/Fall Time	tr/tf		12		ps	20%~80%

Optical Characteristics 100GBASE-SR4 Ethernet Operation

Parameter	Symbol	Min.	Typ.	Max.	Unit	Notes
Transmitter						
Signaling Speed per Lane	BRAVE		25.78		Gbps	
Center Wavelength	λC	840	850	860	nm	
Average Launch Power, Each Lane	Pout/lane	-8.4		2.4	dBm	1
Optical modulation amplitude	Poma			3	dBm	
Extinction Ratio	ER	3			dB	
Transmitter eye mask definition {X1, X2, X3, Y1, Y2, Y3}		IEEE 802.3bm 100Gbase-SR4				2
Receiver						
Signaling Speed per Lane	BRAVE	25.78		28.05	Gbps	
Center Wavelength	λC	840	850	860	nm	
Average Receive Power per Lane	Rpow	-10.3		2.4	dBm	
Stressed Receive Sensitivity in OMA per Lane	Pmin			-5.2	dBm	3
Receive Sensitivity in OMA per Lane	Pmin			-8	dBm	3
LOS Assert	LOSA	-20			dBm	
LOS De-Assert	LOSD			-12	dBm	
LOS Hysteresis		0.5			dB	

Notes:

1. Output is coupled into a 50/125µm multi-mode fiber.
2. Filtered, measured with a PRBS 2^{31}-1 test pattern @25.78Gbps.
3. Receive sensitivity measured at BER less than 5E-5, with a 2^{31}-1 PRBS @25.78Gbps.

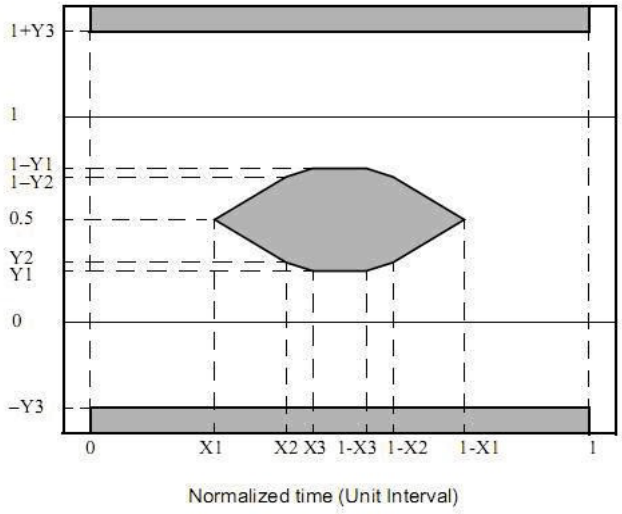

Optical Characteristics OTU4 and 128G Fiber Channel Operation

Parameter	Symbol	Min.	Typ.	Max.	Unit	Notes
Transmitter						
Signaling Speed per Lane	BRAVE	27.95		28.05	Gbps	1
Center Wavelength	λC	840	850	860	nm	
Average Launch Power, Each Lane	Pout/lane	-2.5		2.4	dBm	2
Optical modulation amplitude	Poma			3	dBm	
Extinction Ratio	ER	3			dB	
Transmitter eye mask definition {X1, X2, X3, Y1, Y2, Y3}		FC-PI-6				3
Receiver						
Signaling Speed per Lane	BRAVE	27.95		28.05	Gbps	
Center Wavelength	λC	840	850	860	nm	
Average Receive Power per Lane	Rpow	-10.2		2.4	dBm	
Receive Sensitivity in OMA per Lane	Pmin			-6	dBm	4
LOS Assert	LOSA	-20			dBm	
LOS De-Assert	LOSD			-12	dBm	
LOS Hysteresis		0.5			dB	

Notes:

1. This module will work at 103.1Gbps (25.78Gbpsx4) in default. To work at 112.2Gbps (28.05Gbpsx4), Page 00 bytes 87-88 (Rx and Tx Rate Select) need to be written with 0xFF to enable rate select (refer to SFF-8636), which will lose to default when powered off.

Page 00 Byte 87	Page 00 Byte 88	Data Rate
0xAA	0xAA	103.1Gbps (Default)
0xFF	0xFF	112.2Gbps

2. Output is coupled into a 50/125µm multi-mode fiber.
3. Filtered, measured with a PRBS 2^{31}-1 test pattern @28.05Gbps.
4. Receive sensitivity measured at BER less than 1E-6, with a 2^{31}-1 PRBS @28.05Gbps.

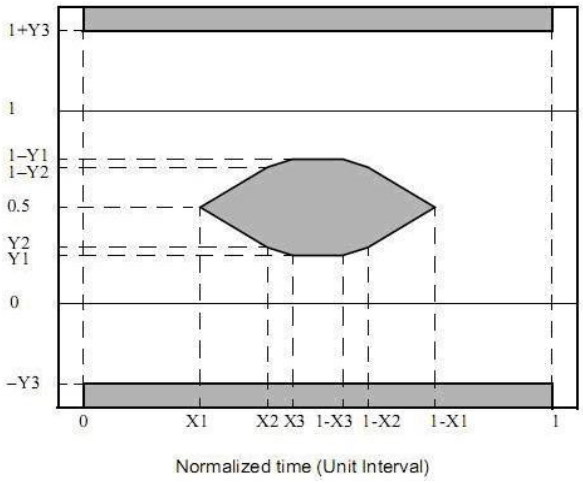

Pin Descriptions

Pin	Logic	Symbol	Name/Descriptions	Ref.
1		GND	Ground	1
2	CML-I	Tx2n	Transmitter Inverted Data Input	
3	CML-I	Tx2p	Transmitter Non-Inverted Data Input	
4		GND	Ground	1
5	CML-I	Tx4n	Transmitter Inverted Data Input	
6	CML-I	Tx4p	Transmitter Non-Inverted Data Input	
7		GND	Ground	1
8	LVTTL-I	ModSelL	Module Select	
9	LVTTL-I	ResetL	Module Reset	
10		VccRx	+3.3V Power Supply Receiver	2
11	LVCMOS- I/O	SCL	2-wire serial interface clock	
12	LVCMOS- I/O	SDA	2-wire serial interface data	
13		GND	Ground	1
14	CML-O	Rx3p	Receiver Non-Inverted Data Output	
15	CML-O	Rx3n	Receiver Inverted Data Output	
16		GND	Ground	1
17	CML-O	Rx1p	Receiver Non-Inverted Data Output	
18	CML-O	Rx1n	Receiver Inverted Data Output	
19		GND	Ground	1
20		GND	Ground	1
21	CML-O	Rx2n	Receiver Inverted Data Output	
22	CML-O	Rx2p	Receiver Non-Inverted Data Output	
23		GND	Ground	1
24	CML-O	Rx4n	Receiver Inverted Data Output	
25	CML-O	Rx4p	Receiver Non-Inverted Data Output	
26		GND	Ground	1
27	LVTTL-O	ModPrsL	Module Present	
28	LVTTL-O	IntL	Interrupt	
29		VccTx	+3.3V Power supply transmitter	2
30		Vcc1	+3.3V Power supply	2
31	LVTTL-I	LPMode	Low Power Mode	
32		GND	Ground	1
33	CML-I	Tx3p	Transmitter Non-Inverted Data Input	
34	CML-I	Tx3n	Transmitter Inverted Data Input	
35		GND	Ground	1
36	CML-I	Tx1p	Transmitter Non-Inverted Data Input	
37	CML-I	Tx1n	Transmitter Inverted Data Input	
38		GND	Ground	1

Notes:

1. GND is the symbol for signal and supply (power) common for the QSFP28 module. All are common within the QSFP28 module and all module voltages are referenced to this potential unless otherwise noted. Connect these directly to the host board signal-common ground plane.
2. Vcc Rx, Vcc1 and Vcc Tx are the receiver and transmitter power supplies and shall be applied concurrently. Vcc Rx, Vcc1 and Vcc Tx may be internally connected within the QSFP28 Module in any combination. The connector pins are each rated for a maximum current of 500mA.

Electrical Pin-out Details

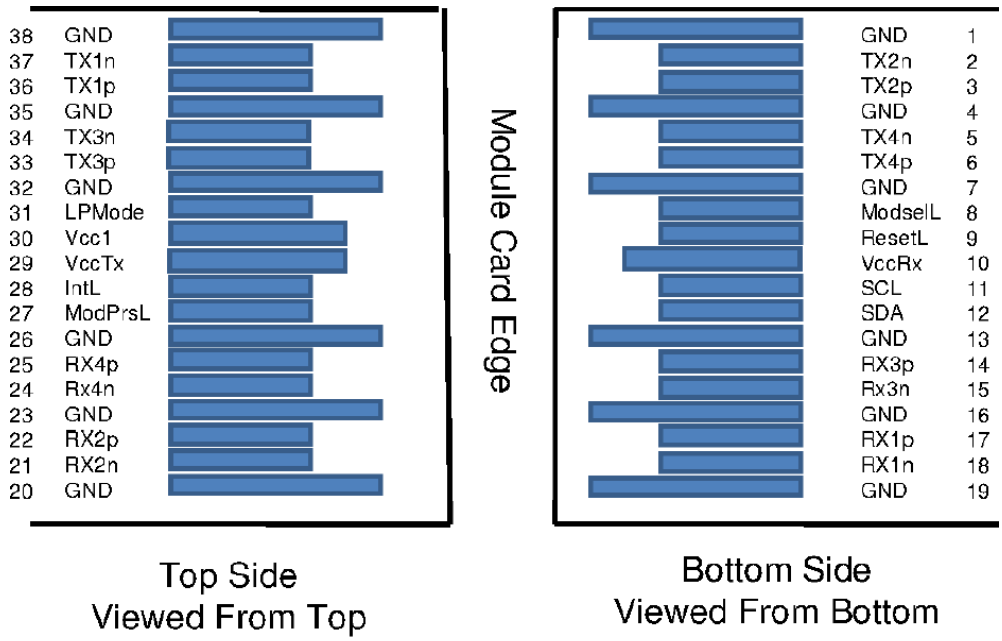

Mechanical Specifications

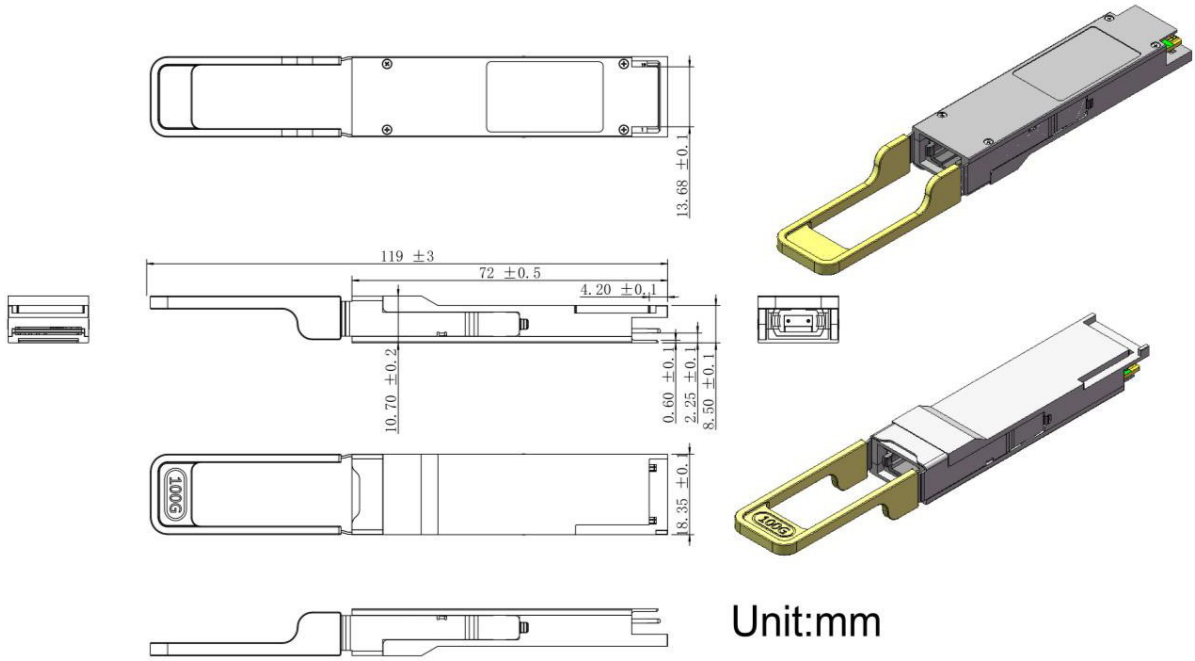

About ProLabs

Our extensive experience comes as standard. For over 20 years ProLabs has delivered optical connectivity solutions that give our customers freedom and choice through our ability to provide seamless interoperability. At the heart of our company is the ability to provide state-of-the-art optical transport and connectivity solutions that are compatible with more than 100 optical switching and transport platforms.

A Complete Portfolio of Network Solutions

ProLabs is focused on innovations in optical transport and connectivity. The combination of our knowledge of optics and networking equipment enables ProLabs to be your single source for optical transport and connectivity solutions from 100Mb to 1.6T while providing innovative solutions that increase network efficiency. We provide the optical connectivity expertise that is compatible with and enhances your switching and transport equipment.

The Trusted Partner

Customer service is our number one value. ProLabs has invested in people, labs and manufacturing capacity to ensure compatible products, and immediate answers to your questions. With Engineering and Manufacturing offices in the U.K. and U.S. augmented by field offices throughout the U.S., U.K. and Asia, ProLabs is able to be our customers best advocate 24 hours a day.

Contact Information

ProLabs US

Email: sales@prolabs.com
Telephone: 952-852-0252

ProLabs UK

Email: salessupport@prolabs.com
Telephone: +44 1285 719 600