10502-C

Extreme Networks® 10502 Compatible TAA 25GBase-SR SFP28 Transceiver (MMF, 850nm, 40m, LC, DOM, No FEC)

Features:

- Up to 25.78Gbps Bi-Directional Data Links
- Built-In CDR with 25.78Gbps Operation
- Electrical Interface Specifications Per SFF-8431
- SFP28 MSA Package with Duplex LC Connector
- Uncooled 850nm VCSEL Laser
- 3.3V Power Supply Lines
- Class 1 Laser Safety Certified
- Metal Enclosure for Lower EMI
- Up to 40M on OM4 MMF with No FEC
- Operating Temperature: 0 to 70 Celsius
- RoHS Compliant and Lead-Free

Applications:

- 25GBase Ethernet
- Access and Enterprise

Product Description

This Extreme Networks® 10502 compatible SFP28 transceiver provides 25GBase-SR throughput up to 40m over multi-mode fiber (MMF) using a wavelength of 850nm via an LC connector. It can operate at temperatures between 0 and 70C. Our transceiver is built to meet or exceed OEM specifications and is guaranteed to be 100% compatible with Extreme Networks®. It has been programmed, uniquely serialized, and tested for data-traffic and application to ensure that it will initialize and perform identically. All of our transceivers comply with Multi-Source Agreement (MSA) standards to provide seamless network integration. Additional product features include Digital Optical Monitoring (DOM) support which allows access to real-time operating parameters. This transceiver is Trade Agreements Act (TAA) compliant. We stand behind the quality of our products and proudly offer a limited lifetime warranty.

ProLabs' transceivers are RoHS compliant and lead-free.

TAA refers to the Trade Agreements Act (19 U.S.C. & 2501-2581), which is intended to foster fair and open international trade. TAA requires that the U.S. Government may acquire only "U.S.-made or designated country end products.")

Rev. 011926

Absolute Maximum Ratings

Parameter	Symbol	Min.	Typ.	Max.	Unit	Notes
Maximum Supply Voltage	Vcc	-0.5		4	V	1
Storage Temperature	Tstg	-40		85	°C	
Operating Case Temperature	Tc	0	25	70	°C	
Relative Humidity	RH	5		85	%	
Data Rate	DR		25.78		Gbps	

Electrical Characteristics

Parameter		Symbol	Min.	Typ.	Max.	Unit	Notes
Module Supply Voltage		Vcc	3.135	3.3	3.465	V	
Module Supply Current		Icc			290	mA	
Power Dissipation		P_{DISS}			1000	W	
Transmitter							
Input Differential Impedance		ZIN		100		Ω	
Differential Data Input Swing		VIN,pp	180		700	mVp-p	
Tx_Fault	**Transmitter Fault**	VOH	2		Vcc	V	
	Normal Operation	VOL	0		0.8	V	
Tx_Disable	**Transmitter Disable**	VIH	2		Vcc	V	
	Transmitter Enable	VIL	0		0.8	V	
Receiver							
Output Differential Impedance		ZOUT		100		Ω	
Differential Data Output Swing		VOUT,pp	300		850	mVp-p	1
Data Output Rise/Fall Time		Tr/Tf		30		ps	2
Rx_LOS	**Loss of Signal (LOS)**	VOH	2.0		Host_Vcc	V	3
	Normal Operation	VOL	0		0.8	V	3

Notes:

1. Internally AC coupled but requires an external 100Ω differential load termination.
2. 20-80%.
3. LOS is an open collector output and should be pulled up with 4.7kΩ on the host board.

Optical Characteristics

Parameter	Symbol	Min.	Typ.	Max.	Unit	Notes
Transmitter						
Launch Optical Power	Po	-2.5		2.4	dBm	1
Extinction Ratio	ER	2			dB	
Center Wavelength Range	λC	840	850	860	nm	
Transmitter and Dispersion Eye Closure	TDEC			4.3	dB	
Spectral Width	Δλ			0.6	nm	
Optical Return Loss Tolerance	ORLT			12	dB	
POUT @Tx_Disable Asserted	Poff			-20	dBm	1
Receiver						
Center Wavelength	λC	840		860	nm	
Receiver Sensitivity (Pavg)	RxSens			-7	dBm	2
Receiver Sensitivity (OMA)				-7	dBm	2
Receiver Overload (Pavg)	POL	2.4			dBm	
Optical Return Loss	ORL	12			dB	
LOS De-Assert	LOSD			-11	dBm	
LOS Assert	LOSA	-30			dBm	
LOS Hysteresis		0.5			dB	

Notes:

1. 50/125µm fiber with NA = 0.2.
2. Measured with PRBS 2^{31}-1 with $1E^{-12}$ BER @25.78Gbps.

Pin Descriptions

Pin	Symbol	Name/Description	Notes
1	VeeT	Transmitter Ground.	1
2	Tx_Fault	Transmitter Fault. LVTTL-O. “High” indicates a fault condition.	2
3	Tx_Disable	Transmitter Disable. LVTTL-I. “High” or “open” disables the transmitter.	3
4	SDA	2-Wire Serial Interface Data. LVCMOS-I/O. MOD-DEF2.	4
5	SCL	2-Wire Serial Interface Clock. LVCMOS-I/O. MOD-DEF1.	4
6	MOD_ABS	Module Absent (Output). Connected to the VeeT or VeeR in the module.	5
7	RS0	Rate Select 0. Not Used. Presents high input impedance.	
8	Rx_LOS	Receiver Loss of Signal. LVTTL-O.	2
9	RS1	Rate Select 1. Not Used. Presents high input impedance.	
10	VeeR	Receiver Ground.	1
11	VeeR	Receiver Ground.	1
12	RD-	Inverse Received Data Out. CML-O. AC Coupled.	
13	RD+	Received Data Out. CML-O. AC Coupled.	
14	VeeR	Receiver Ground.	
15	VccR	+3.3V Receiver Power.	
16	VccT	+3.3V Transmitter Power.	
17	VeeT	Transmitter Ground.	1
18	TD+	Transmitter Data In. CML-I. AC Coupled.	
19	TD-	Inverse Transmitter Data In. CML-I. AC Coupled.	
20	VeeT	Transmitter Ground.	1

Notes:

1. The module signal grounds are isolated from the module case.
2. This is an open collector/drain output that, on the host board, requires a 4.7kΩ to 10kΩ pull-up resistor to the Host_Vcc.
3. This input is internally biased “high” with a 4.7kΩ to 10kΩ pull-up resistor to the VccT.
4. 2-Wire Serial Interface Clock and Data lines require an external pull-up resistor dependent on the capacitance load.
5. This is a ground return that, on the host board, requires a 4.7kΩ to 10kΩ pull-up resistor to the Host_Vcc.

Electrical Pin-Out Details

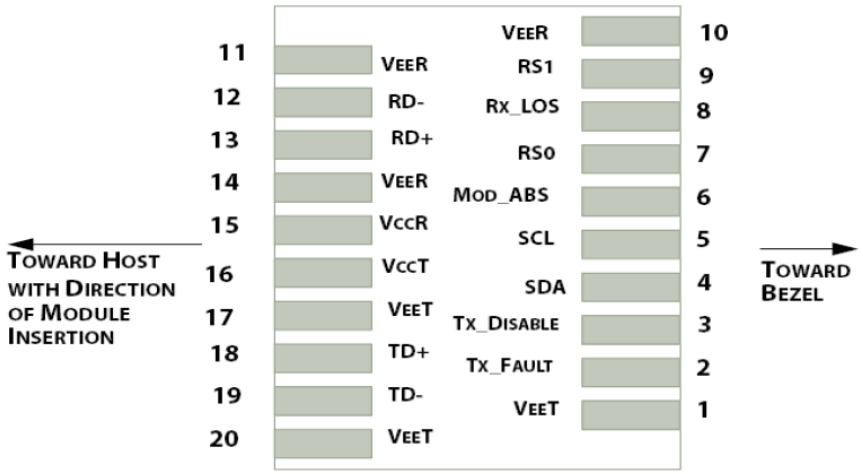

Host Board Power Supply Filter Network

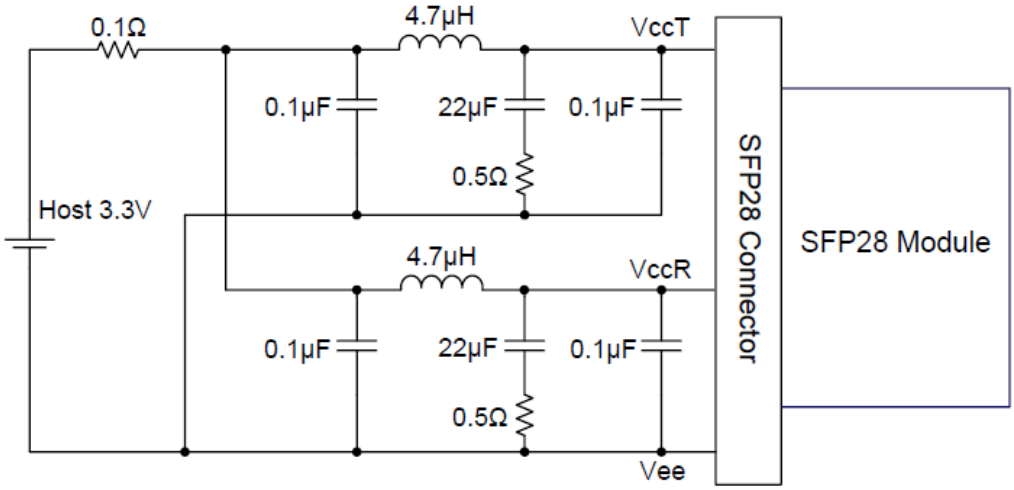

Block Diagram

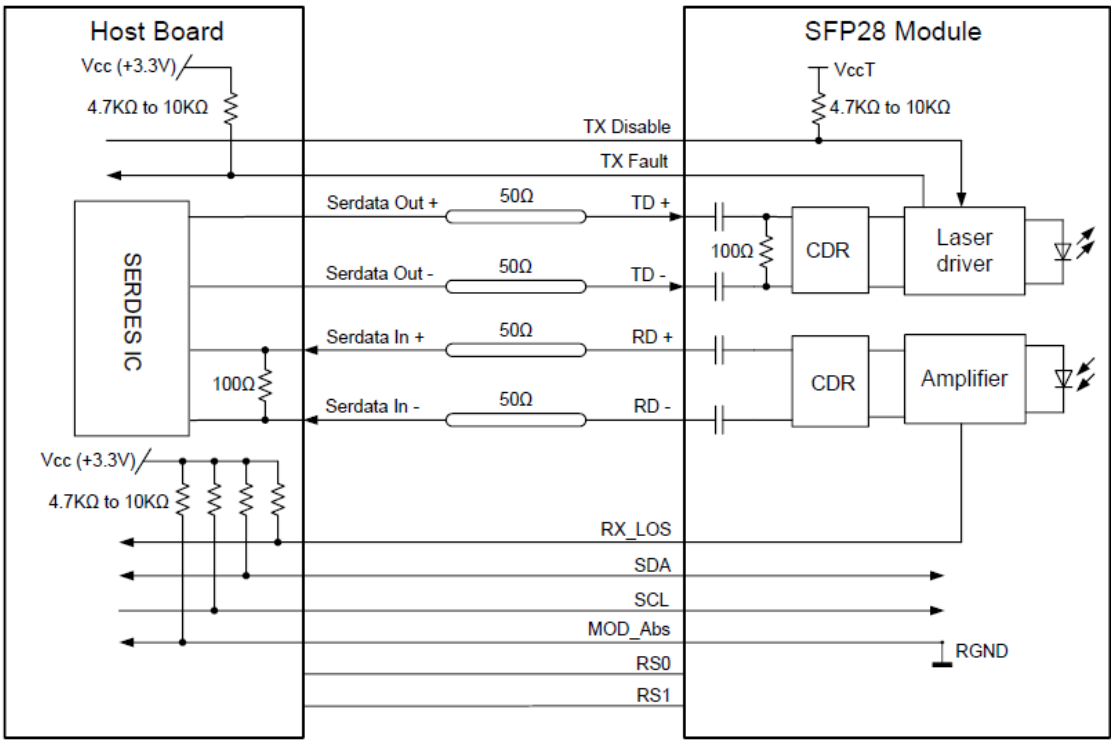

Mechanical Specifications

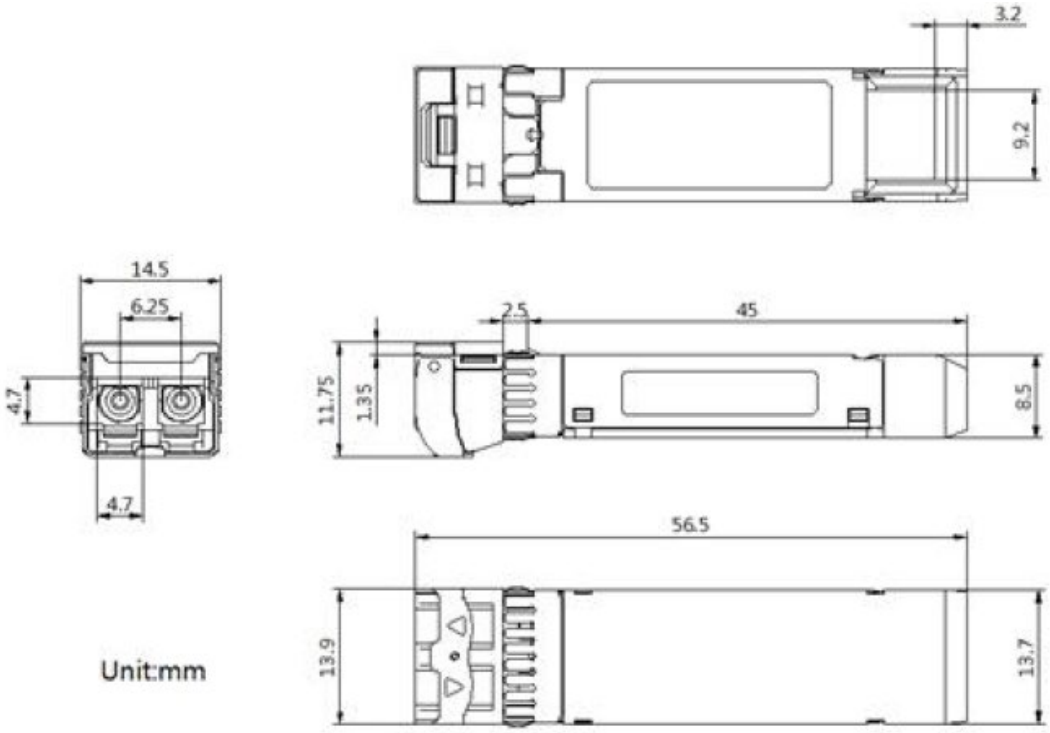

About ProLabs

Our extensive experience comes as standard. For over 20 years ProLabs has delivered optical connectivity solutions that give our customers freedom and choice through our ability to provide seamless interoperability. At the heart of our company is the ability to provide state-of-the-art optical transport and connectivity solutions that are compatible with more than 100 optical switching and transport platforms.

A Complete Portfolio of Network Solutions

ProLabs is focused on innovations in optical transport and connectivity. The combination of our knowledge of optics and networking equipment enables ProLabs to be your single source for optical transport and connectivity solutions from 100Mb to 1.6T while providing innovative solutions that increase network efficiency. We provide the optical connectivity expertise that is compatible with and enhances your switching and transport equipment.

The Trusted Partner

Customer service is our number one value. ProLabs has invested in people, labs and manufacturing capacity to ensure compatible products, and immediate answers to your questions. With Engineering and Manufacturing offices in the U.K. and U.S. augmented by field offices throughout the U.S., U.K. and Asia, ProLabs is able to be our customers best advocate 24 hours a day.

Contact Information

ProLabs US

Email: sales@prolabs.com
Telephone: 952-852-0252

ProLabs UK

Email: salessupport@prolabs.com
Telephone: +44 1285 719 600