REV.	ECN NO.	DATE	SIGN	DESCRIPTION
A	-	2025/03/10	Zed	Rev.01 to Rev.A
B	C250800	2025/06/17	Wenxiang	B X5
C	C251023	2025/08/14	Wenxiang	C X2

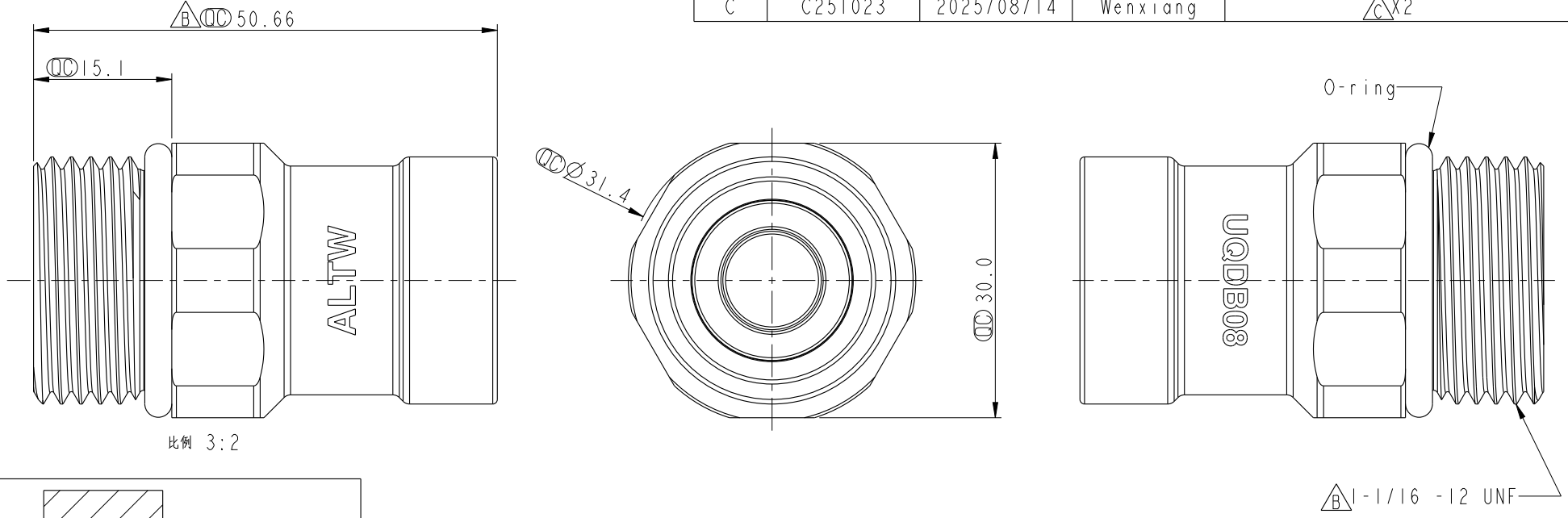

比例 3:2

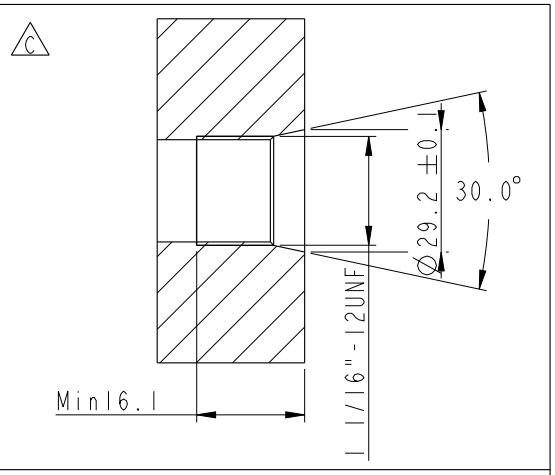

Recommended
Panel Cut-Out

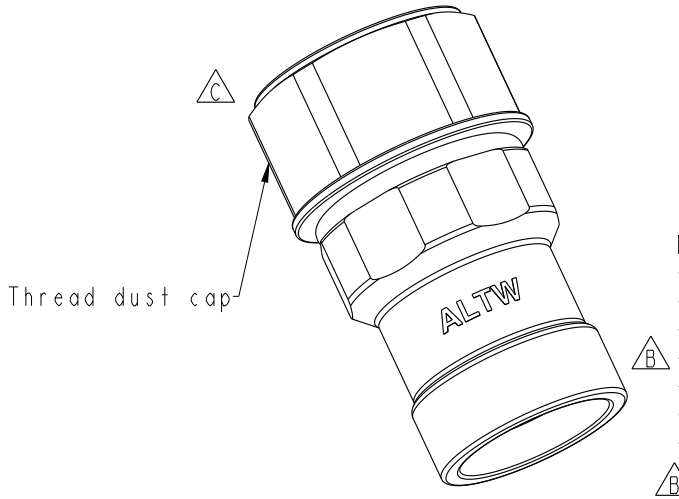

Note:
* RoHS Compliant
* QC Important dimension
* Seal inside:Rubber, Black
* B Connection Type: 1-1/16 -12 UNF male thread
* Thread dust cap:Thermoplastic, Yellow
* Nominal Diameter: DN10
* Weight: Ref.139.0G/PCS

B

UNIT:mm

TOLERANCE ±0.5

TITLE: SNAPQD BLIND-MATE, SOCKET, NO COLOR 1-1/16"-12UNF THREAD, MALE B

SCALE 1:1 | SIZE A4 | SHEET 1 OF 1

REV. C | WC-REV. .0 | QC: Inspection item

Amphenol LTW
安費諾亮泰企業股份有限公司

ITEM NO SQDB-08SAMM-BNA001	DRAWN BY Wenxiang Li	DATE 2025/06/17
DWG NO SQDB-08SAMM-BNA001	CHECKED BY Vic	DATE 2025/06/17
CUSTOMER ALTW	APPROVED BY Jerry	DATE 2025/06/17

THIS DOCUMENT IS SUBJECT TO CHANGE WITHOUT NOTICE. IT IS CONFIDENTIAL AND A PROPERTY OF Amphenol LTW. DISCLOSURE TO THIRD PARTY HAS TO BE AUTHORIZED BY Amphenol LTW.