REV.	ECN NO.	DATE	SIGN	DESCRIPTION
A	-	2025/03/20	Zed	Rev.01 to Rev.A
B	C251190	2025/09/23	Peng_Fei	B X1

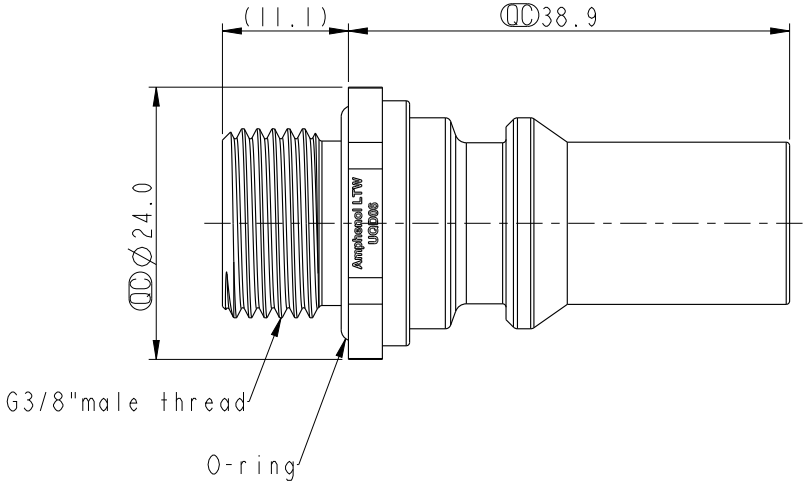

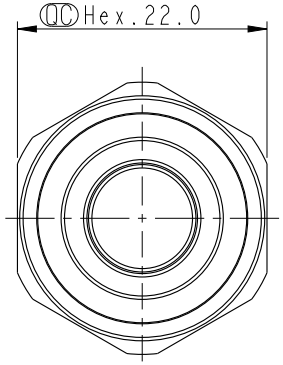

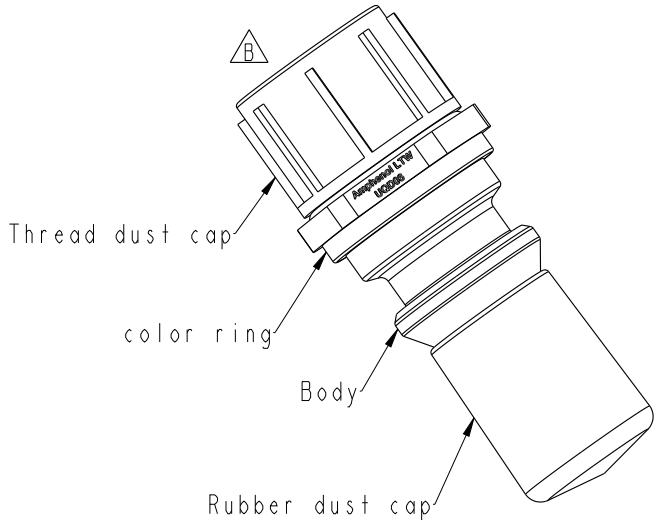

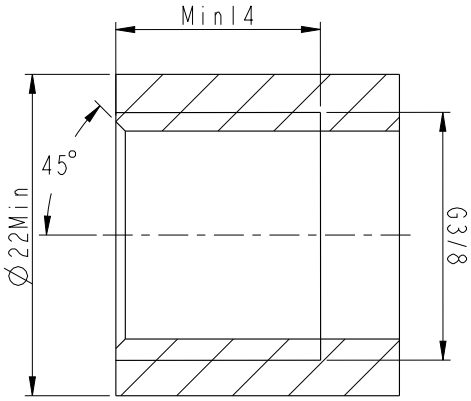

Recommended
Panel Cut-Out

SQD-06PAKM-PXX001

RD:Red
BE:Blue

Note:
* RoHS Compliant
* QC Important dimension
* Body Material: Stainless steel
* O-ringl: Rubber black
* Connection Type: G3/8" male thread
* Color ring: Thermoplastic, Red or Blue
* Rubber dust cap: Thermoplastic, Black
* Thread dust cap:Thermoplastic, Yellow
* Nominal Diameter: DN7
* Weight: Ref.42.9G / PCS

UNIT:mm

TOLERANCE
.X ±0.25
.XX ±0.1
.XXX ±0.05
ANGLES ±1°

TITLE: SNAPQD, PLUG, G3/8"-THREAD, MALE

SCALE 1:1 | SIZE A4 | SHEET 1 OF 1
REV. B | WC-REV. .0 | QC:Inspection item

Amphenol LTW
安費諾亮泰企業股份有限公司

ITEM NO	DRAWN BY Peng_Fei	DATE 2025/09/23
DWG NO SQD-06PAKM-PXX001	CHECKED BY Vic	DATE 2025/09/23
CUSTOMER ALTW	APPROVED BY Jerry	DATE 2025/09/23

WI0814-03-RM01A2

THIS DOCUMENT IS SUBJECT TO CHANGE WITHOUT NOTICE. IT IS CONFIDENTIAL AND A PROPERTY OF Amphenol LTW. DISCLOSURE TO THIRD PARTY HAS TO BE AUTHORIZED BY Amphenol LTW.