REV.	ECN NO.	DATE	SIGN	DESCRIPTION
A	-	2025/04/07	Zed	New Initial.
B	C251190	2025/09/23	Peng_Fei	B X2

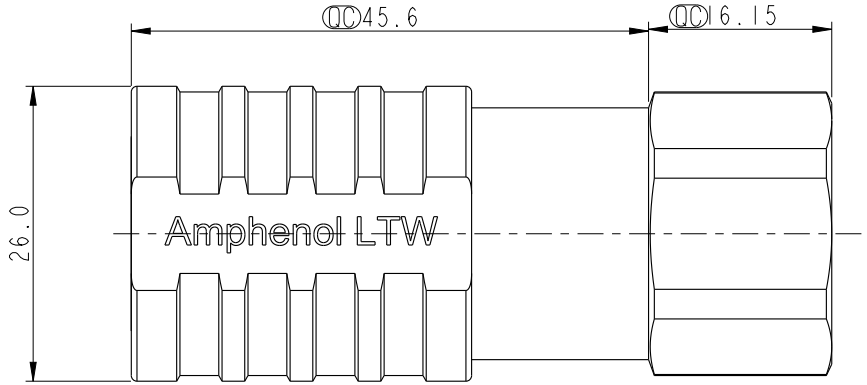

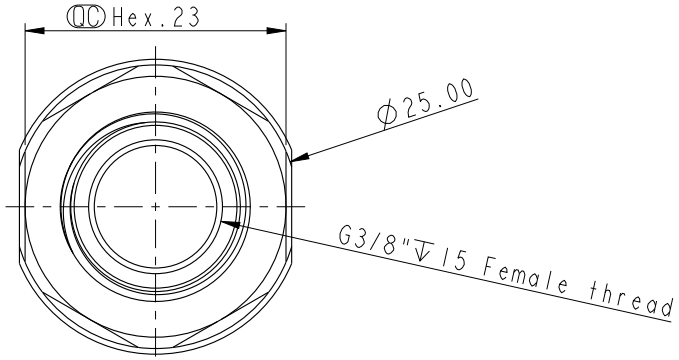

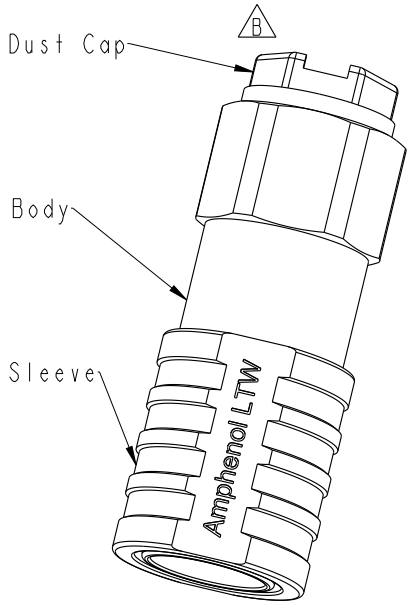

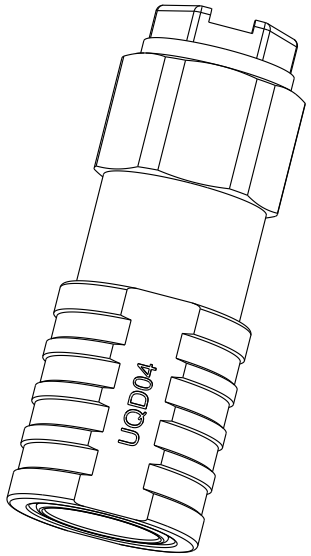

SQD-04SAKF-PXX001

RD:Red
BE:Blue

Note:
* RoHS Compliant
* QC Important dimension
* Body Material: Stainless steel
* Seal inside: Rubber, Black
* Connection Type: G3/8"↓15Female thread
* B Dust Cap: Thermoplastic, Yellow
* Sleeve color: Aluminum, Red or Blue
* Nominal Diameter: DN5

UNIT: mm	TITLE: SNAPQD, SOCKET G3/8"-THREAD, FEMALE	Amphenol LTW 安費諾亮泰企業股份有限公司	ITEM NO	DRAWN BY: Peng_Fei	DATE: 2025/09/23
TOLERANCE ±0.5	SCALE 1:1 / SIZE A4 / SHEET 1 OF 1		DWG NO: SQD-04SAKF-PXX001	CHECKED BY: Vic	DATE: 2025/09/23
	REV. B / WC-REV. .0	QC: Inspection item	CUSTOMER: ALTW	APPROVED BY: Jerry	DATE: 2025/09/23

THIS DOCUMENT IS SUBJECT TO CHANGE WITHOUT NOTICE. IT IS CONFIDENTIAL AND A PROPERTY OF Amphenol LTW. DISCLOSURE TO THIRD PARTY HAS TO BE AUTHORIZED BY Amphenol LTW.