DWG NO.	SH	REV
C-NDYYYF-C199	1	D

TABLE 1

AHSP P/N	LENGTH "A"	ACD P/N	DESCRIPTION
NDYYYF-C101	1000±20MM	SF-NDYYYF0001-001M	QSFP-DD 30AWG PASSIVE, 1M
NDYYYF-C104	1500±30MM	SF-NDYYYF0004-001.5M	QSFP-DD 30AWG PASSIVE, 1.5M

REVISIONS

ZONE	REV.	ECN	DESCRIPTION	BY	DATE	APPROVED
	B	RGAO-20121604	ADDED ACD P/N COLUMN TO TABLE 1. ADDED CE STAMP TO SHEET 1. ADDED REFERENCE DIMENSION TO BENDING RADIUS	N.ZENG	12/17/2020	A.LI
	C	RGAO-21020302	ADDED DESCRIPTION COLUMN TO TABLE 1.	N.ZENG	2/4/2021	A.LI
	D	ALII-22072502	C DRAWING REVISION MATCHES TO P DRAWING REVISION	D.YU	07/26/2022	A.LI

NOTE: ONLY THREE MOST RECENT RELEASED REVISIONS DISPLAYED.

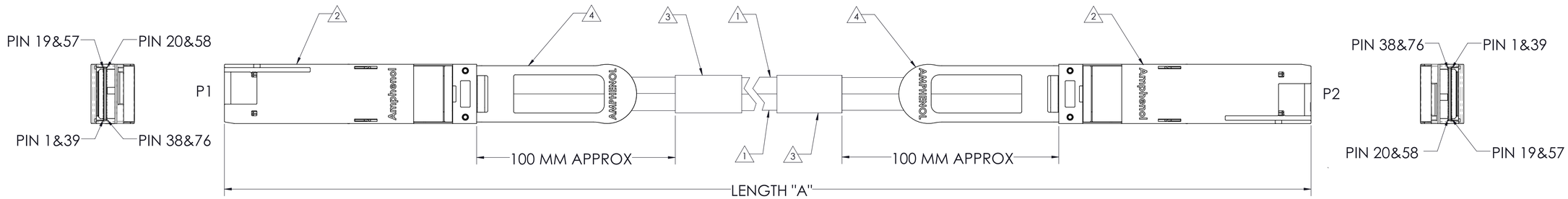

TABLE 2

ITEM No.	DESCRIPTION
1	30 AWG, 8-PR (Ø6.73), SPLITTER, PVC JKT, VW1
2	PLUG, QSFP-DD, REFERENCE "QSFP-DD MSA"
3	LABEL, WRAPPED - AHSP P/N, REV, DATE CODE, LENGTH, CoO, SERIAL NUMBER & WEEE LOGO AND CE LOGO
4	PULL TAB, BLUE 2718
5	EPROM - REFERENCE SFF-8636, PAGE A0 ONLY

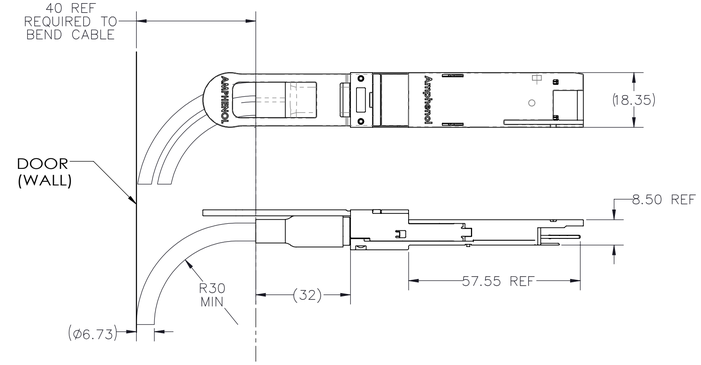

RADIUS FROM END OF DIECAST

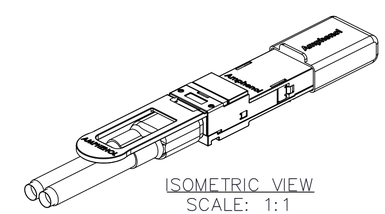

ISOMETRIC VIEW
SCALE: 1:1

NOTES:

1. THIS DRAWING IS RESERVED FOR AMPHENOL CABLES ON DEMAND.
2. ASSEMBLIES SHALL BE COMPLIANT TO QSFP-DD MSA SPECIFICATION.
3. CABLE ASSEMBLIES, COMPONENTS AND SUB-COMPONENTS SHALL BE COMPLIANT TO EU DIRECTIVE 2011/65/EU-RoHS2.
4. CABLE ASSEMBLIES MUST MEET SHIELDING EFFECTIVENESS REQUIREMENTS OF 35DB MINIMUM FROM 1-10GHZ AND 30DB FROM 10-18 GHZ.
5. PACKAGE COMPLETED ASSY IN AN APPROPRIATELY SIZED ESD BAG.
6. UL LABEL MUST BE ON SHIPPING CARTON PER SUBJECT 764 OF THE UL COMPONENT WIRING HARNESS (ZPFW2) FILE #E86140. CSA LABEL MUST BE ON SHIPPING CARTON.

Amphenol RoHS 2011/65/EU

TOLERANCES		DWN 12/14/2018 M.HUSSAIN	**Amphenol AHSP** A Division of Amphenol Corporation 200 Innovative Way, Suite 201, Nashua, N.H. 03062 (603) 879-3000
0.0	± 0.1	CHK 12/14/2018 M.HUSSAIN	TITLE CABLE ASSY, QSFP-DD PASSIVE, 100Ω, DUAL-ENTRY 30 AWG
0.00	± 0.08	APVD 12/14/2018 M.HUSSAIN	
0.000	± -		
ANGLES	± 1.0°		

UNLESS OTHERWISE SPECIFIED DIMENSIONS ARE IN MM

INTERPRET PER ASME Y14.5

CODE IDENT 31413

CUSTOMER USE DRAWING

PART NO.	REV
SEE TABLE 1	N/A
DRAWING NO. C-NDYYYF-C199	REV D
SIZE D	SCALE 2:1	SHEET 1 OF 2

DWG NO. C-NDYYYF-C199 SH 1 REV D

AHSP_szD_mm.drwdot Rev01/201409

DWG NO.	SH	REV
C-NDYYYF-C199	2	D

REVISIONS

ZONE	REV.	ECN	DESCRIPTION	BY	DATE	APPROVED
			SEE SHEET 1			

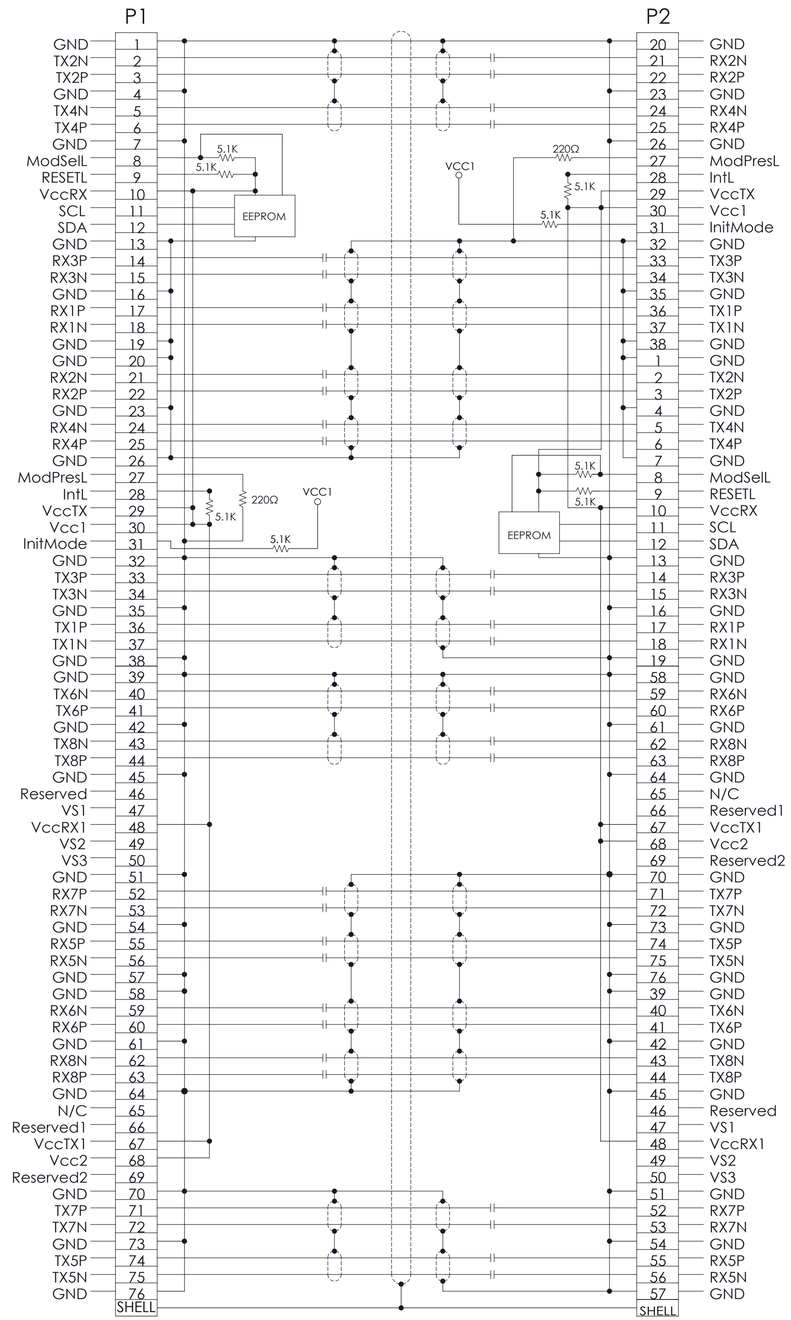

NOTE: DC BLOCKING CAP VALUE IS 100nF

TOLERANCES		DWN	12/14/2018 M.HUSSAIN
0.0	± 0.1	CHK	12/14/2018 M.HUSSAIN
0.00	± 0.08	APVD	12/14/2018 M.HUSSAIN
0.000	± —		
ANGLES	± 1.0°		

UNLESS OTHERWISE SPECIFIED DIMENSIONS ARE IN MM

Amphenol AHSP

A Division of Amphenol Corporation
200 Innovative Way, Suite 201, Nashua, N.H. 03062 (603) 879-3000

TITLE
CABLE ASSY, QSFP-DD PASSIVE, 100Ω, DUAL-ENTRY 30 AWG

INTERPRET PER ASME Y14.5

CUSTOMER USE DRAWING

CODE IDENT 31413

PART NO.	REV
SEE TABLE 1	N/A
DRAWING NO. C-NDYYYF-C199	REV D

SIZE D | SCALE 1:1 | SHEET 2 OF 2

DWG NO. C-NDYYYF-C199 | SH 2 | REV D

AHSP_szD_mm.drwdot Rev01/201409