REV.	ECN NO.	DATE	SIGN	DESCRIPTION
C	LEN15A0376	2014/12/24	Jinhai	Change Logo
D	C201856	2020/11/25	Vicky	△D X2
E	C251489	2025/11/13	Ruru	△E X2

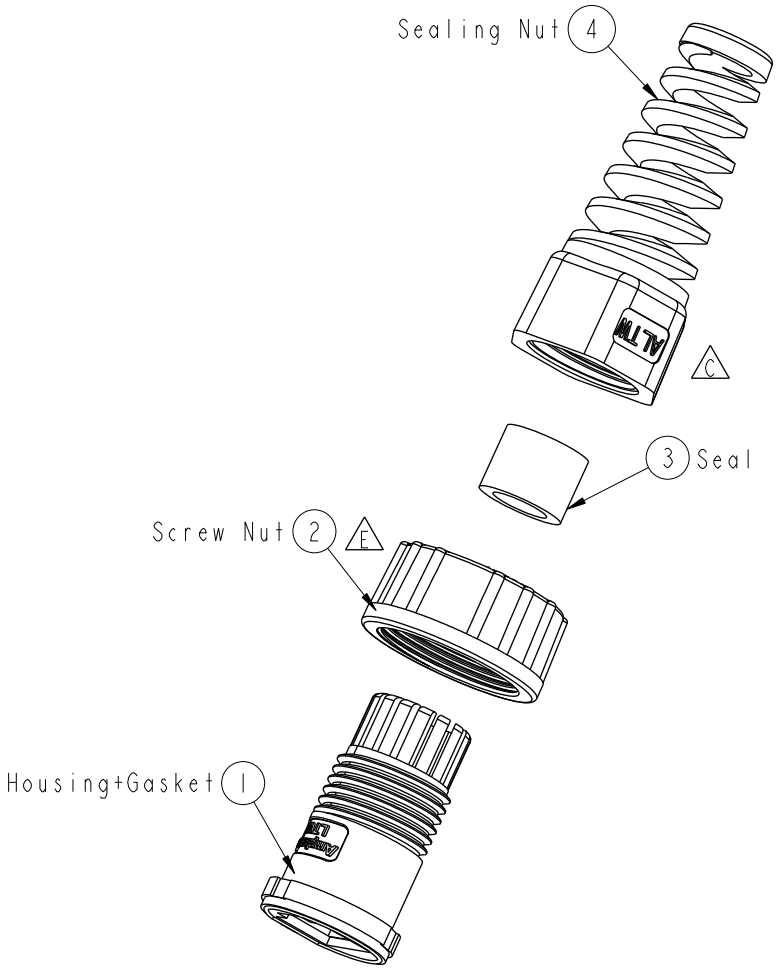

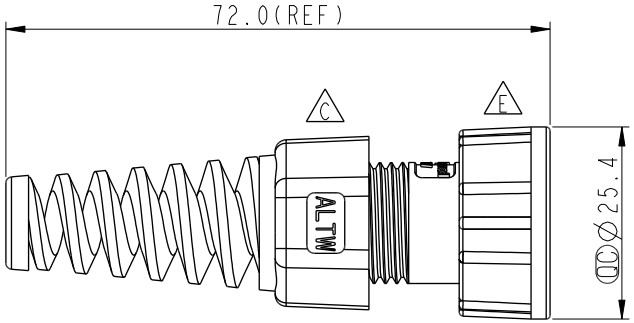

△D Note:
* QC Important Dimention To Check
* Waterproof Rate: IP67, Mated
△B * Housing: Thermoplastic, Black
* Gasket: Rubber, Gray
* Screw Nut: Thermoplastic, Black
△B * Sealing Nut: Thermoplastic, Black.
* Seal: Rubber, Gray.
* Seal For Cable OD Ø4.5mm~Ø7.5mm
* One Set Unassembled On One PE Bag

UNIT: mm

TOLERANCE
.X ±0.25
.XX ±0.1
.XXX ±0.05
ANGLES ±1°

TITLE: RJ, C PLASTIC, NONE CABLE W/SR, M, FI COMPLED, SCREW △D

SCALE 1:1 | SIZE A4 | SHEET 1 OF 1
REV. E | WC-REV. A.10 | QC: Inspection item

Amphenol LTW
安費諾亮泰企業股份有限公司

ITEM NO RCP-00AMMA-SLM7001	DRAWN BY Ruru	DATE 2025-11-13
DWG NO RCP-00AMMA-SLM7001	CHECKED BY Vicky	DATE 2025-11-13
CUSTOMER ALTW	APPROVED BY Rita	DATE 2025-11-13

WI0814-03-RW01A2

THIS DOCUMENT IS SUBJECT TO CHANGE WITHOUT NOTICE. IT IS CONFIDENTIAL AND A PROPERTY OF Amphenol LTW. DISCLOSURE TO THIRD PARTY HAS TO BE AUTHORIZED BY Amphenol LTW.