REV.	ECN NO.	DATE	SIGN	DESCRIPTION
A		2022-01-21	Jiahe Lin	Rev.01 To Rev.A
B	C251298	2025/10/15	Xian Kun	B *6

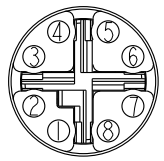

8P

Pin Assignments
Front View

MSXS-XXPFFR-EE0001

XX: No. Of Pin

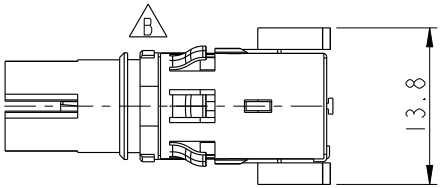

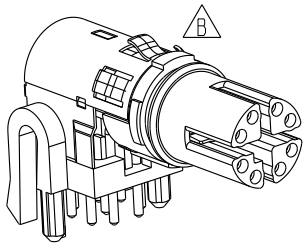

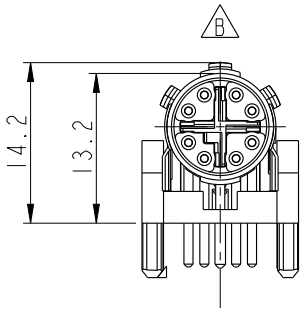

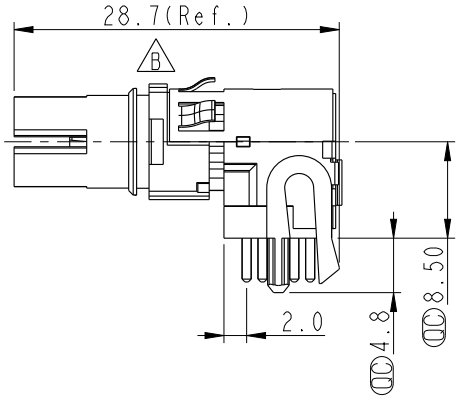

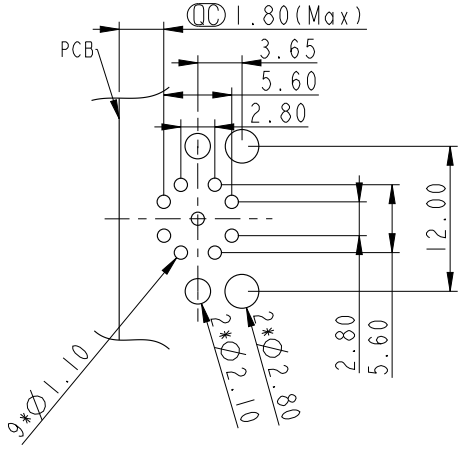

8P

PCB Layout

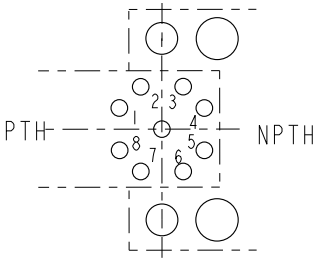

8P

Pin Definition

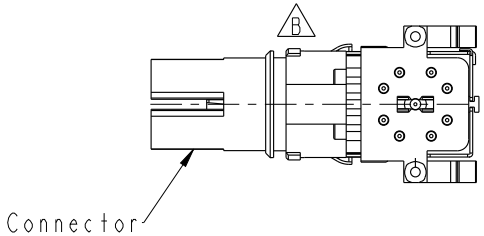

Note:
* RoHS Compliant
* QC Important dimension
* Waterproof rate: Non-Waterproof
* Connector
  Housing: Thermoplastic, Black
  Pin: Copper alloy, Gold plated
* For pcb thickness: 1.6~2.4mm

UNIT: mm

TOLERANCE
.X ±0.25
.XX ±0.1
.XXX ±0.05
ANGLES ±1°

TITLE	N SEN, M12 X -SHLD, RECEPTACLE, F, F, PCB R		
SCALE 3:2	SIZE A4	SHEET 1 OF 1	
REV. B	WC-REV. A.1	QC: Inspection item	

Amphenol LTW
安費諾亮泰企業股份有限公司

ITEM NO		DRAWN BY Xian Kun	DATE 2025/10/15
DWG NO MSXS-XXPFFR-EE0001		CHECKED BY Xiao Feng	DATE 2025/10/15
CUSTOMER ALTW		APPROVED BY Jerry	DATE 2025/10/15

W10814-03-EM01A2

THIS DOCUMENT IS SUBJECT TO CHANGE WITHOUT NOTICE. IT IS CONFIDENTIAL AND A PROPERTY OF Amphenol LTW. DISCLOSURE TO THIRD PARTY HAS TO BE AUTHORIZED BY Amphenol LTW.