REV.	ECN NO.	DATE	SIGN	DESCRIPTION
G	C221973	2022/12/26	Ruru	G XI
H	C231034	2023/08/10	Ruru	H XI
I	C251374	2025/10/27	Vicky	I XI

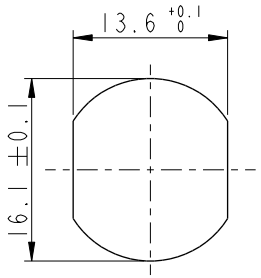

Recommended Panel Cut-Out

B

D
MSDS-XXPFFP-SF8002
XX: No. Of Pin

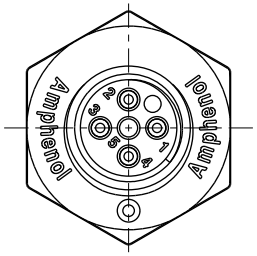

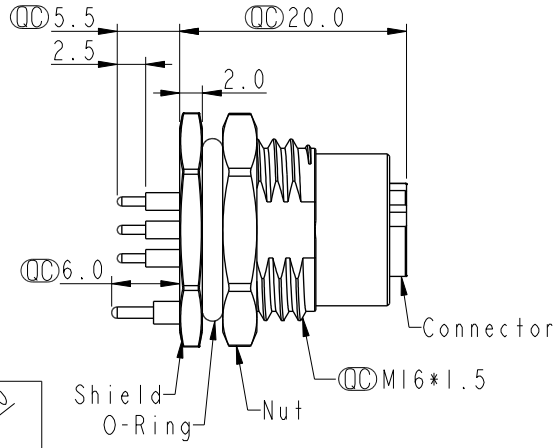

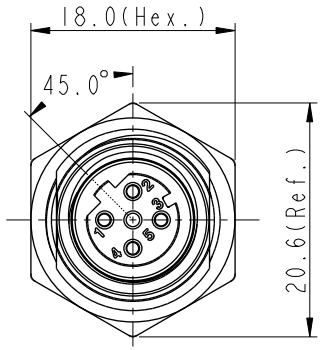

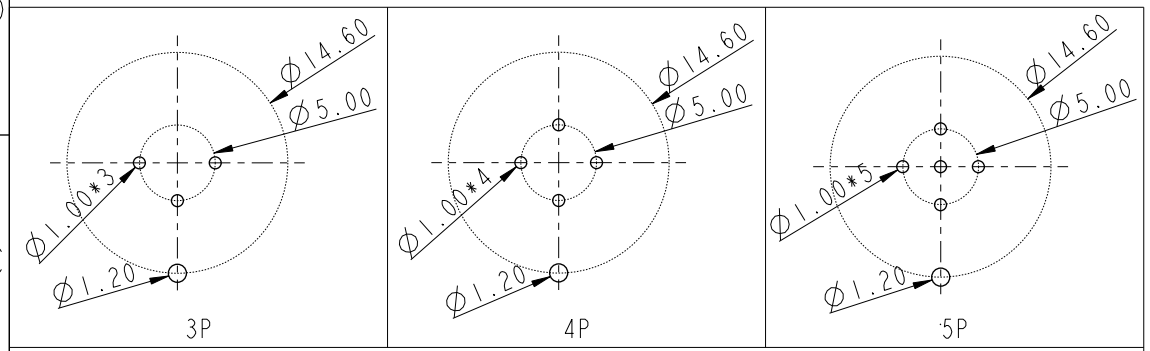

PCB Layout

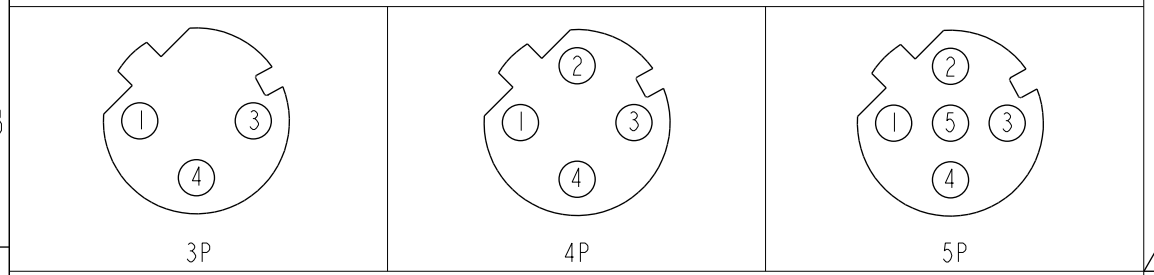

Pin Assignment Front View

C

D F Note:
- * RoHS Compliant
- * QC Important dimension
- C G * Waterproof rate: IP68, unmated 1m/24h
  - H IP69K, mated
- * Connector
  - Housing: Thermoplastic, Black
  - Pin: Copper alloy, Gold plated
  - O-Ring: Rubber, Green
- E * Shield: Metal
- E * Nut: Metal
- * O-Ring: Rubber, Black
- * For panel thickness max: 4.5mm
- I * The Nut Is Packed Separately In The Bag

UNIT: mm

TOLERANCE
.X ±0.25
.XX ±0.1
.XXX ±0.05
ANGLES ±1°

TITLE: N SEN, M12 D -SHLD, SCREW RECEPTACLE, F, F, PCB S F

SCALE 3:2 | SIZE A4 | SHEET 1 OF 1
REV. I | WC-REV. A.5 | QC: Inspection item

Amphenol LTW
安費諾亮泰企業股份有限公司

ITEM NO	DRAWN BY: Vicky	DATE: 2025-10-27
DWG NO: D MSDS-XXPFFP-SF8002	CHECKED BY: Ruru	DATE: 2025-10-27
CUSTOMER: ALTW	APPROVED BY: Rita	DATE: 2025-10-27

W10814-03-[redacted]01A2

THIS DOCUMENT IS SUBJECT TO CHANGE WITHOUT NOTICE. IT IS CONFIDENTIAL AND A PROPERTY OF Amphenol LTW. DISCLOSURE TO THIRD PARTY HAS TO BE AUTHORIZED BY Amphenol LTW.