REV.	ECN NO.	DATE	SIGN	DESCRIPTION
E	C221973	2022/12/26	Ruru	E XI
F	C231034	2023/08/10	Ruru	F XI
G	C251374	2025/10/27	Vicky	G XI

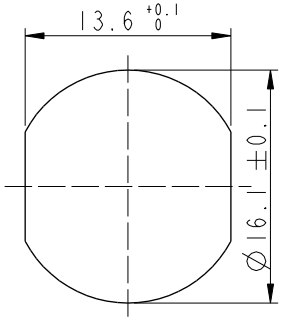

Recommended Panel Cut-Out

C
MSBP-XXPFFR-SF8002

XX: No. Of Pin

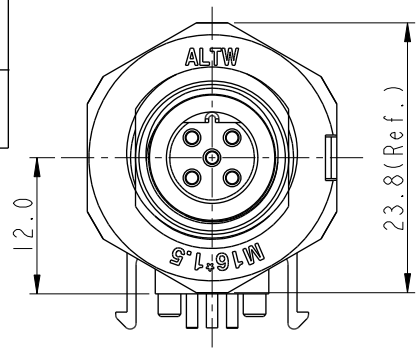

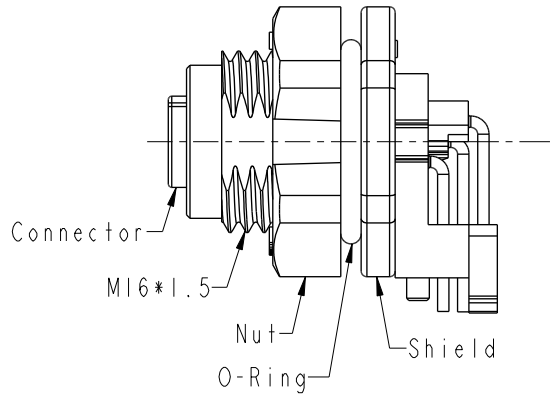

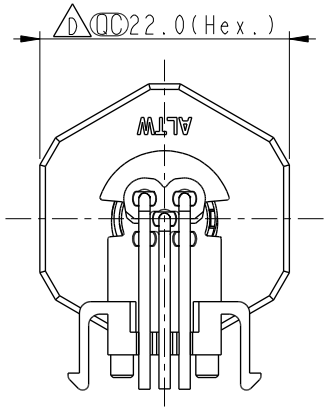

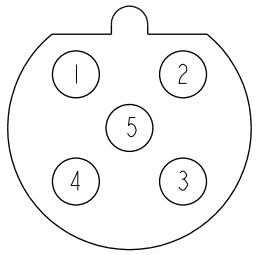

5P

Pin Assignment Front View

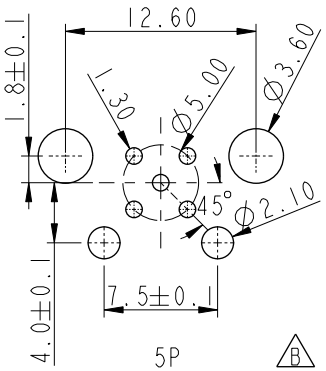

PCB Layout

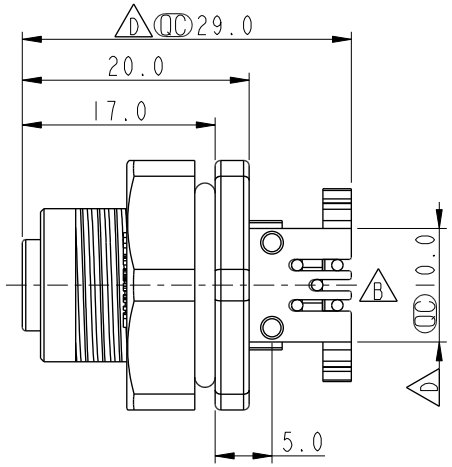

Note: C D
* RoHS Compliant
* QC Important dimension
E * Waterproof rate: IP68, unmated 1m/24h
F IP69K, mated
* Connector
  Housing: Thermoplastic, Black
  Pin: Copper alloy, Gold plated
  O-Ring: Rubber, Gray
* Shield: Thermoplastic, Black
* Nut: Thermoplastic, Black
* O-Ring: Rubber, Black
* For panel thickness max: 4.0mm
* For pcb thickness max: 1.6mm
G * The Nut Is Packed Separately In The Bag

UNIT: mm

TOLERANCE
.X ±0.25
.XX ±0.1
.XXX ±0.05
ANGLES ±1°

TITLE: N SEN, M12 B -PLASTIC, SCREW RECEPTACLE, F, F, PCB R C

SCALE: 1:1 | SIZE: A4 | SHEET 1 OF 1

REV. G | WC-REV. A.1 | QC: Inspection item

Amphenol LTW
安費諾亮泰企業股份有限公司

ITEM NO	DRAWN BY: Vicky	DATE: 2025-10-27
DWG NO: C MSBP-XXPFFR-SF8002	CHECKED BY: Ruru	DATE: 2025-10-27
CUSTOMER: ALTW	APPROVED BY: Rita	DATE: 2025-10-27

W10814-03-RW01A2

THIS DOCUMENT IS SUBJECT TO CHANGE WITHOUT NOTICE. IT IS CONFIDENTIAL AND A PROPERTY OF Amphenol LTW. DISCLOSURE TO THIRD PARTY HAS TO BE AUTHORIZED BY Amphenol LTW.