REV.	ECN NO.	DATE	SIGN	DESCRIPTION
G	C240400	2024/03/27	Xiaofeng	G X16
H	C241156	2024/10/14	Yunchen	H X3
I	C251374	2025/10/27	Vicky	I X1

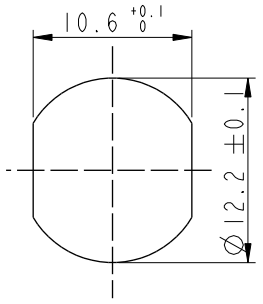

Recommended Panel Cut-Out

D MSAS-XXPMMR-SF7003

XX: No. Of Pin

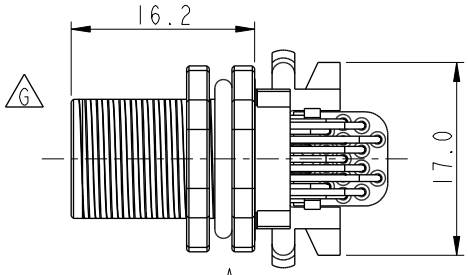

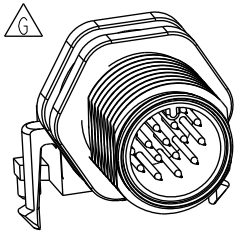

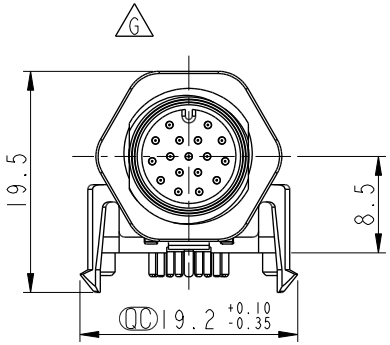

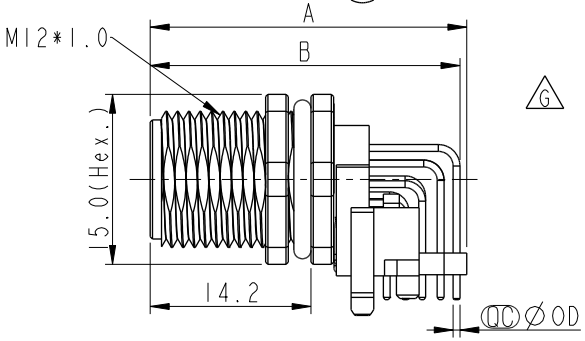

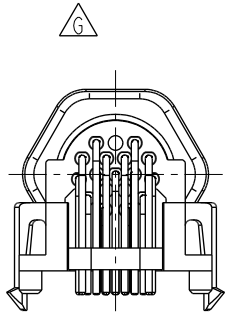

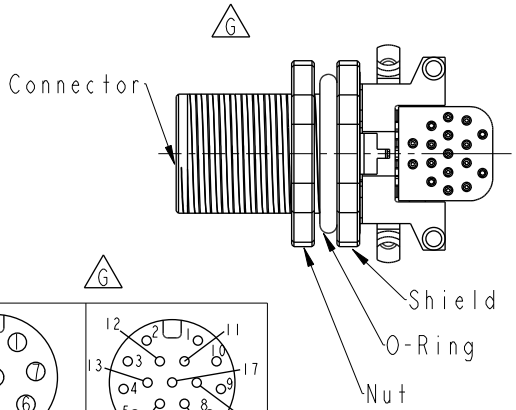

G		F	
MSAS-03PMMR-SF7003	26.1	25.0	1.0
MSAS-04PMMR-SF7003	26.1	25.0	1.0
MSAS-05PMMR-SF7003	26.1	25.0	1.0
MSAS-06PMMR-SF7003	25.9	25.2	0.8
MSAS-08PMMR-SF7003	25.9	25.2	0.8
MSAS-17PMMR-SF7003	27.9	27.3	0.6
Item No.	A	B	OD

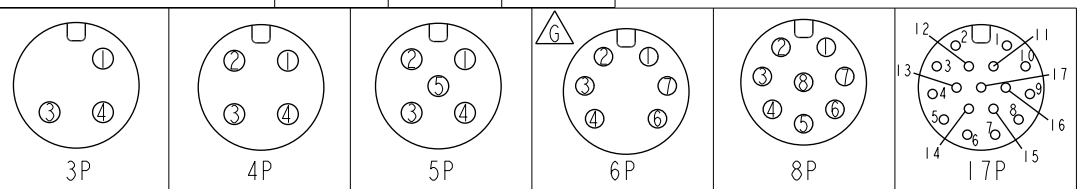

Pin Assignment Front View

D Note:
- * RoHS Compliant
- * QC Important dimension
- E * Waterproof rate: IP67, mated
- * Connector
  - Housing: Thermoplastic, Black
  - Pin: Copper alloy, Gold plated
  - O-Ring: Rubber, Black
- * Shield: Metal
- * Nut: Metal
- * O-Ring: Rubber, Gray
- * For panel thickness max: 3.0mm
- C * For pcb thickness max: 1.6mm
- I * The Nut Is Packed Separately In The Bag

UNIT: mm

TOLERANCE
.X ±0.25
.XX ±0.1
.XXX ±0.05
ANGLES ±1°

TITLE: N SEN, M12 A -SHLD, SCREW RECEPTACLE, M, M, PCB R D

SCALE 3:2 | SIZE A4 | SHEET 1 OF 3

REV. I | WC-REV. A.3 | QC: Inspection item

Amphenol LTW

安費諾亮泰企業股份有限公司

ITEM NO	DRAWN BY Vicky	DATE 2025-10-27
DWG NO MSAS-XXPMMR-SF7003	CHECKED BY Ruru	DATE 2025-10-27
CUSTOMER ALTW	APPROVED BY Rita	DATE 2025-10-27

THIS DOCUMENT IS SUBJECT TO CHANGE WITHOUT NOTICE. IT IS CONFIDENTIAL AND A PROPERTY OF Amphenol LTW. DISCLOSURE TO THIRD PARTY HAS TO BE AUTHORIZED BY Amphenol LTW.

PCB Layout

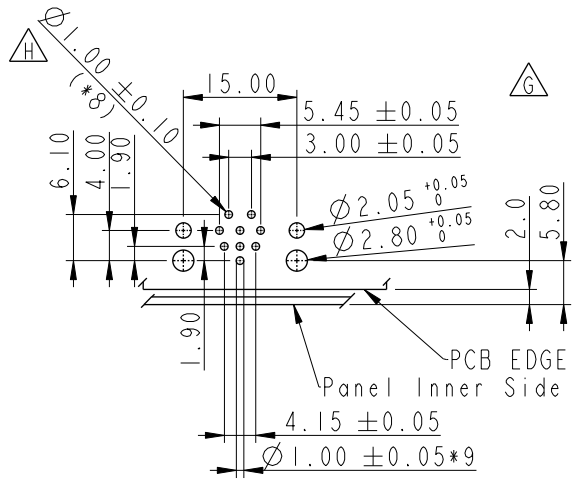

8P

Pin	X	Y	Pin	X	Y
1	9.2	4.3	12	6.69	2.9
2	5.8	4.3	13	5.87	1.27
3	4.57	2.9	14	6.69	-0.2
4	4.28	1.27	15	8.31	-0.2
5	5.03	-0.2	16	9.13	1.27
6	6.58	-1.85	17	7.5	1.27
7	8.42	-1.85			
8	9.97	-0.2			
9	10.72	1.27			
10	10.43	2.9			
11	8.31	2.9			

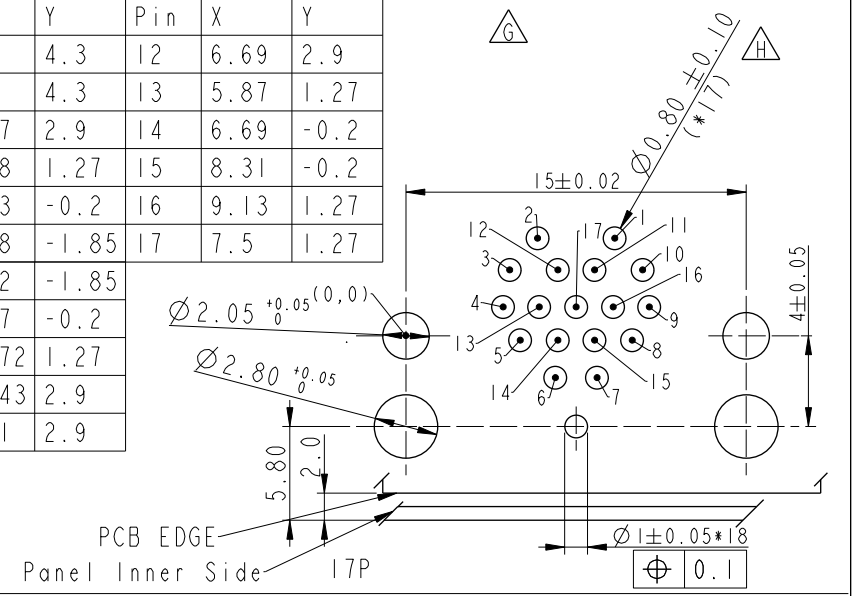

17P

PCB Layout

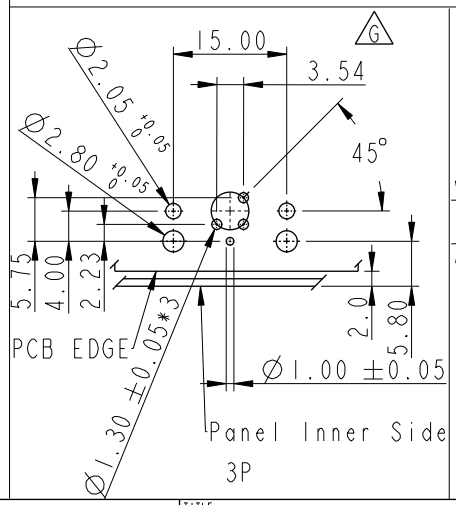

3P

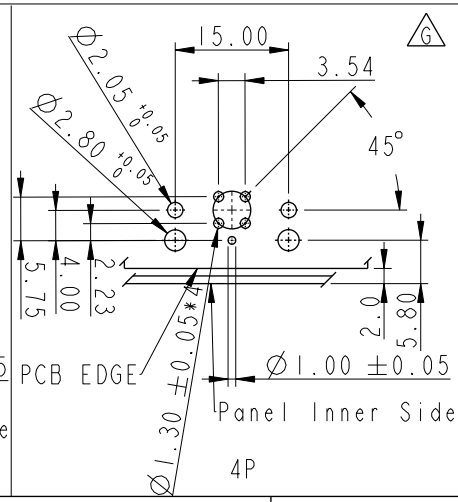

4P

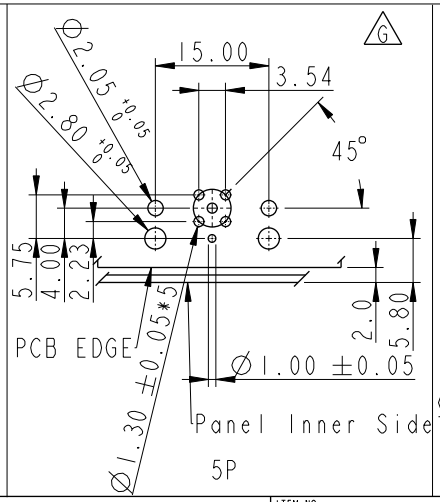

5P

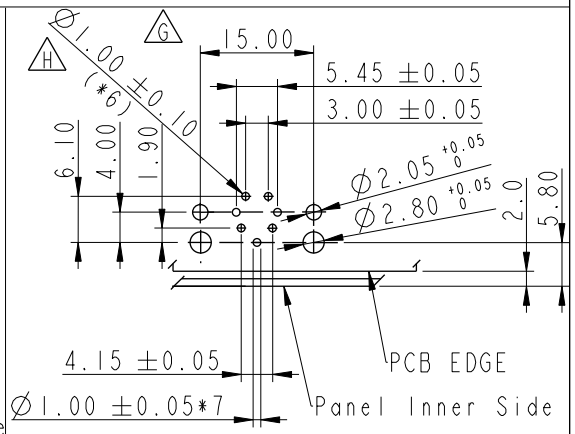

6P

UNIT: mm

TOLERANCE
.X ±0.25
.XX ±0.1
.XXX ±0.05
ANGLES ±1°

TITLE: N SEN, M12 A -SHLD, SCREW RECEPTACLE, M, M, PCB R (D)			
SCALE 3:2	SIZE A4	SHEET 2 OF 3	
REV. 1	WC-REV. A.3	(QC): Inspection item	

Amphenol LTW
安費諾亮泰企業股份有限公司

ITEM NO	DRAWN BY Vicky	DATE 2025-10-27
DWG NO MSAS-XXPMMR-SF7003	CHECKED BY Ruru	DATE 2025-10-27
CUSTOMER ALTW	APPROVED BY Rita	DATE 2025-10-27

THIS DOCUMENT IS SUBJECT TO CHANGE WITHOUT NOTICE. IT IS CONFIDENTIAL AND A PROPERTY OF Amphenol LTW. DISCLOSURE TO THIRD PARTY HAS TO BE AUTHORIZED BY Amphenol LTW.

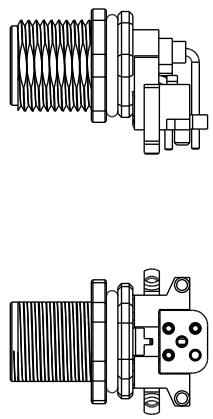

3Pin

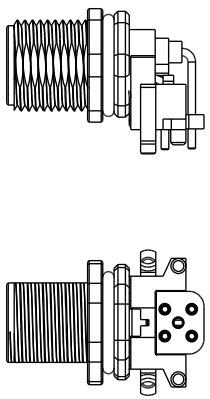

4Pin

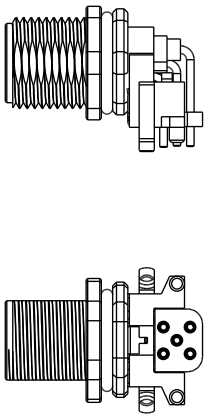

5Pin

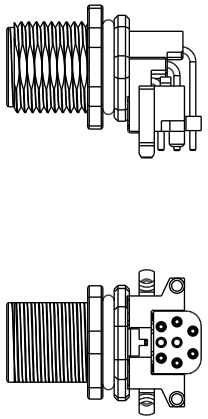

6Pin

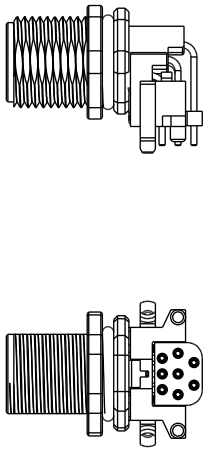

8Pin

Product View

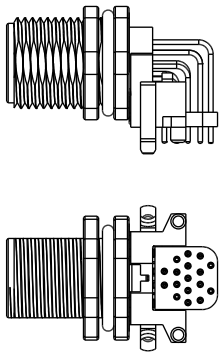

17Pin

G

Product View

UNIT:mm

TOLERANCE

.X	±0.25
.XX	±0.1
.XXX	±0.05
ANGLES	±1°

TITLE: N SEN, M12 A -SHLD, SCREW RECEPTACLE, M, M, PCB R

SCALE	SIZE	SHEET
1:1	A4	3 OF 3
REV. 1	WC-REV. A.3	QC: Inspection item

Amphenol LTW

安費諾亮泰企業股份有限公司

ITEM NO	DRAWN BY: Vicky	DATE: 2025-10-27
DWG NO: MSAS-XXPMMR-SF7003	CHECKED BY: Ruru	DATE: 2025-10-27
CUSTOMER: ALTW	APPROVED BY: Rita	DATE: 2025-10-27

W10814-03-RW01A2

THIS DOCUMENT IS SUBJECT TO CHANGE WITHOUT NOTICE. IT IS CONFIDENTIAL AND A PROPERTY OF Amphenol LTW. DISCLOSURE TO THIRD PARTY HAS TO BE AUTHORIZED BY Amphenol LTW.