REV.	ECN NO.	DATE	SIGN	DESCRIPTION
A		2025/02/21	Yunchen	Rev.01 to Rev.A
B	C251100	2025/08/27	Yunchen	B *1

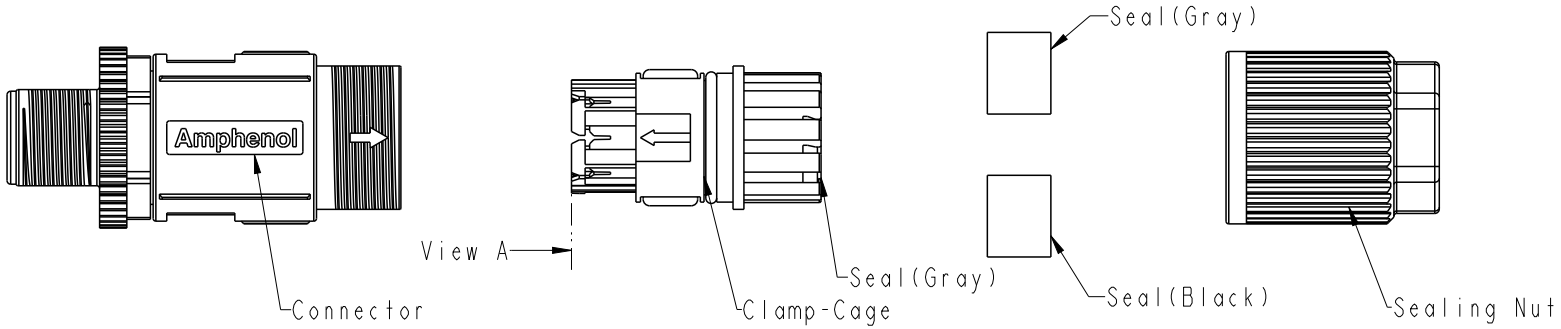

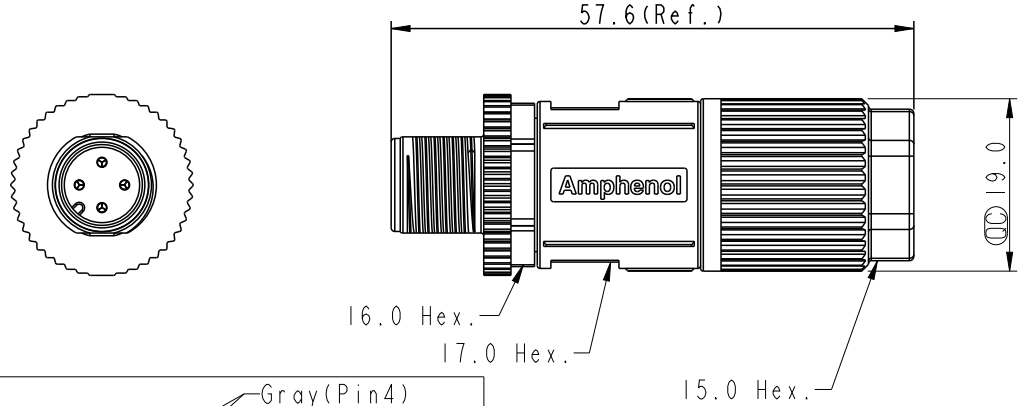

MSAS- XX BMMD-SL8004

XX:No.of Pin

Note:
* RoHS Compliant
* QC Important Dimension
* Waterproof rate: IP68, mated 1m/24h
* Connector
  Housing: Thermoplastic, Black
  Pin: Copper alloy, Gold/Tin plated
  Extension Nut: Metal
  B O-Ring: Rubber, Black
* Clamp Cage: Thermoplastic, Original
* Sealing Nut: Metal
* Seal For Cable:
  Seal(Gray)+Seal(Gray):∅5.8mm~∅7.1mm
  Seal(Gray)+Seal(Black):∅4.7mm~∅5.7mm
* Applicable wire gauge: 20AWG~26AWG
* One set unassembled in one pe bag

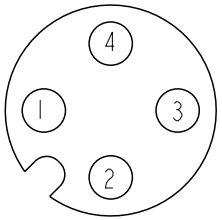

4P

Pin Assignments
Front View

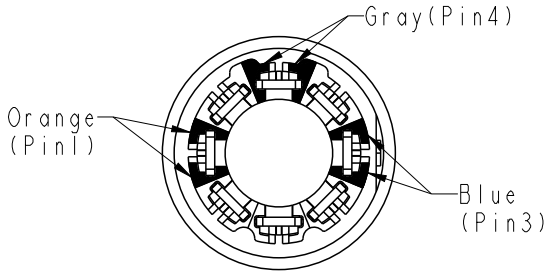

View A

UNIT:mm

TOLERANCE
.X ±0.25
.XX ±0.1
.XXX ±0.05
ANGLES ±1°

TITLE: M12 A-SHLD, SCREW CABLE W/O SR, M, M, F1 IDC

SCALE: 1:1 | SIZE: A4 | SHEET 1 OF 1

REV. B | WC-REV. .0 | QC:Inspection item

Amphenol LTW
安費諾亮泰企業股份有限公司

ITEM NO	DRAWN BY: Yunchen	DATE: 2025/08/27
DWG NO: MSAS-XXBMMD-SL8004	CHECKED BY: Wen	DATE: 2025/08/27
CUSTOMER: ALTW	APPROVED BY: Aric	DATE: 2025/08/27

W10814-03-XW01A2

THIS DOCUMENT IS SUBJECT TO CHANGE WITHOUT NOTICE. IT IS CONFIDENTIAL AND A PROPERTY OF Amphenol LTW. DISCLOSURE TO THIRD PARTY HAS TO BE AUTHORIZED BY Amphenol LTW.