REV.	ECN NO.	DATE	SIGN	DESCRIPTION
A		2024/04/23	Hubert	Rev.01 to Rev.A
B	C251212	2025/09/26	Vicky	B X1

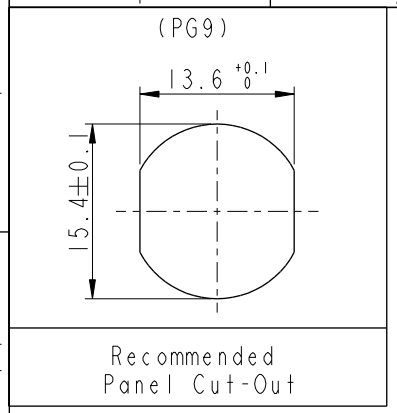

MSAP-XXPMMS-SF8001

XX: No. Of Pin

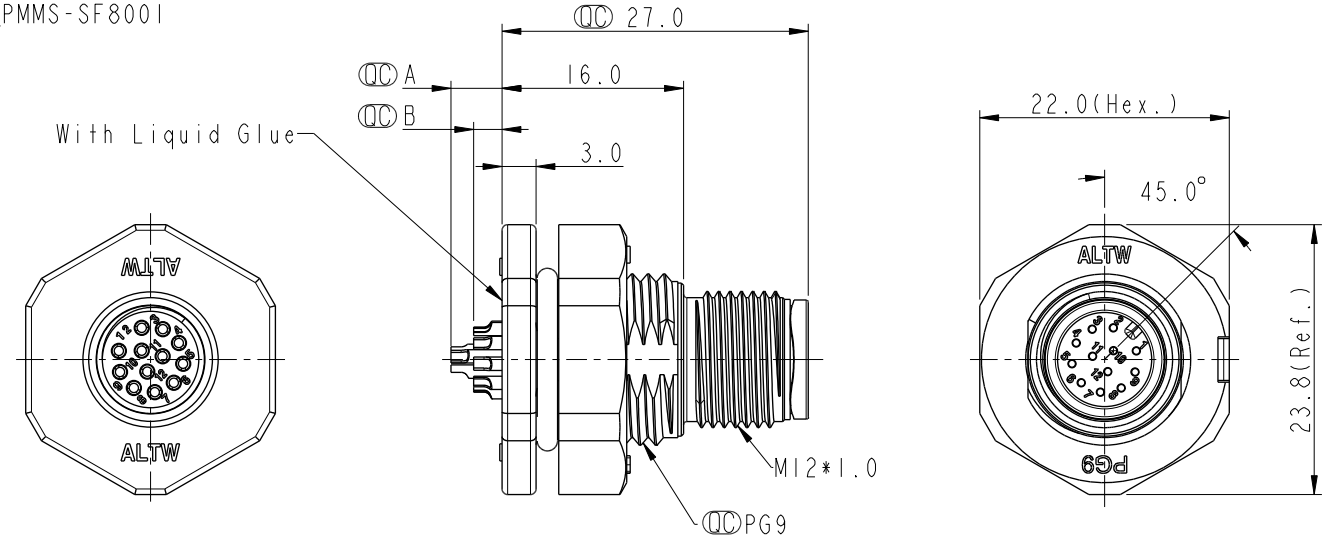

Item No.	A	B
	Pin伸出長度	
MSAP-03PMMS-SF8001		2.5
MSAP-04PMMS-SF8001		2.5
MSAP-05PMMS-SF8001		2.5
MSAP-06PMMS-SF8001		2.5
MSAP-08PMMS-SF8001		2.5
MSAP-10PMMS-SF8001	4.5	2.5
MSAP-12PMMS-SF8001	4.5	2.5

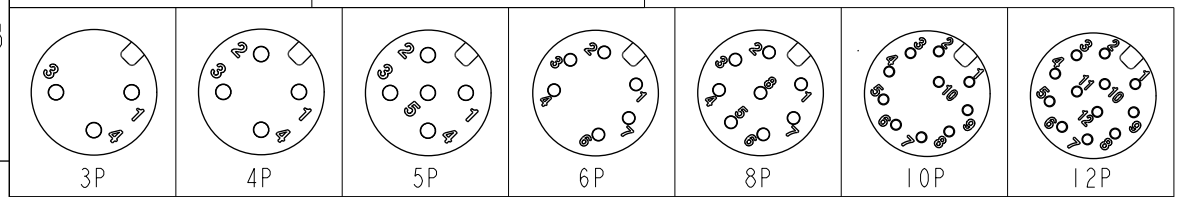

Pin Assignment Front View

Note:
* RoHS Compliant
* QC Important dimension
* Waterproof rate: IP68, unmated 1m/24h
  IP69K, mated
* Connector
  Housing: Thermoplastic, Black
  Pin: Copper alloy, Gold plated
* Shield: Thermoplastic, Black
* Nut: Thermoplastic, Black
* O-Ring: Rubber, Black
* For panel thickness max: 4.0mm
* B The Nut Is Packed Separately In The Bag

UNIT: mm

TOLERANCE
.X ±0.25
.XX ±0.1
.XXX ±0.05
ANGLES ±1°

TITLE: N SEN, M12 A -PLASTIC, SCREW RECEPTACLE, M, M, SOLDER

SCALE: 3:2 | SIZE: A4 | SHEET 1 OF 1

REV.: B | WC-REV.: A.6 | QC: Inspection item

Amphenol LTW
安費諾亮泰企業股份有限公司

ITEM NO	DRAWN BY: Vicky	DATE: 2025-09-26
DWG NO: MSAP-XXPMMS-SF8001	CHECKED BY: Ruru	DATE: 2025-09-26
CUSTOMER: ALTW	APPROVED BY: Rita	DATE: 2025-09-26

THIS DOCUMENT IS SUBJECT TO CHANGE WITHOUT NOTICE. IT IS CONFIDENTIAL AND A PROPERTY OF Amphenol LTW. DISCLOSURE TO THIRD PARTY HAS TO BE AUTHORIZED BY Amphenol LTW.