| REV. | ECN NO. | DATE | SIGN | DESCRIPTION |
|---|---|---|---|---|
| D | C230012 | 2023/01/05 | Vicky | D XI |
| E | C231037 | 2023/08/08 | Vicky | E XI |
| F | C251374 | 2025/10/27 | Vicky | F XI |

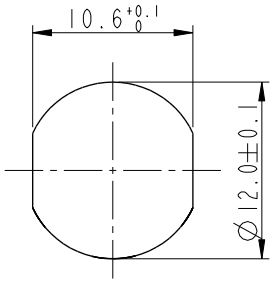


Recommended Panel Cut-Out

B MSAP-XXPMMP-SF8003

XX: No. Of Pin

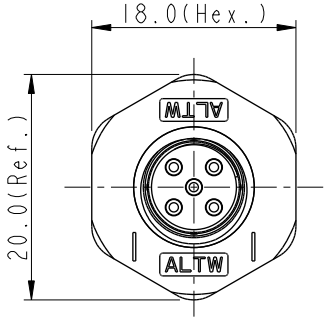


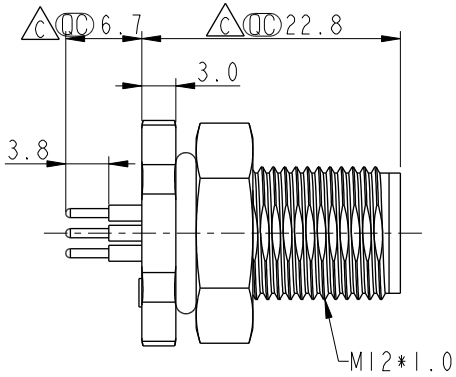


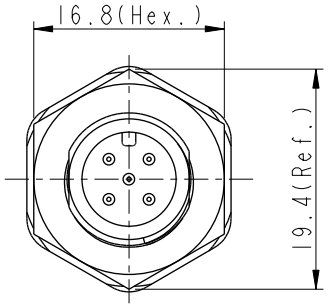


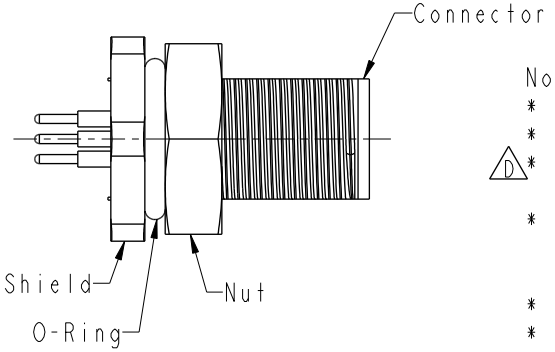


Note: B C
* RoHS Compliant
* QC Important dimension
D * Waterproof rate: IP68, unmated 1m/24h
E IP69K, mated
* Connector
  Housing: Thermoplastic, Black
  Pin: Copper alloy, Gold plated
* Shield: Thermoplastic, Black
* Nut: Thermoplastic, Black
* O-Ring: Rubber, Gray
* For panel thickness max: 4.0mm
* For pcb thickness max: 1.6mm
F * The Nut Is Packed Separately In The Bag

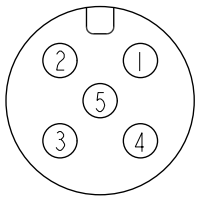


Pin Assignment Front View

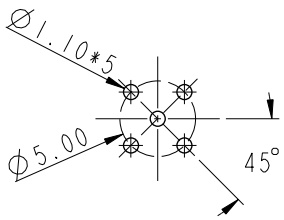


PCB Layout

UNIT: mm

TOLERANCE
.X ±0.25
.XX ±0.1
.XXX ±0.05
ANGLES ±1°

TITLE: N SEN, M12 A -PLASTIC, SCREW RECEPTACLE, M, M, PCB S B

SCALE 2:1 | SIZE A4 | SHEET 1 OF 1

REV. F | WC-REV. A.4 | QC: Inspection item

**Amphenol LTW**
安費諾亮泰企業股份有限公司

| | | |
|---|---|---|
| ITEM NO | DRAWN BY: Vicky | DATE: 2025-10-27 |
| DWG NO: B MSAP-XXPMMP-SF8003 | CHECKED BY: Ruru | DATE: 2025-10-27 |
| CUSTOMER: ALTW | APPROVED BY: Rita | DATE: 2025-10-27 |

THIS DOCUMENT IS SUBJECT TO CHANGE WITHOUT NOTICE. IT IS CONFIDENTIAL AND A PROPERTY OF Amphenol LTW. DISCLOSURE TO THIRD PARTY HAS TO BE AUTHORIZED BY Amphenol LTW.