REV.	ECN NO.	DATE	SIGN	DESCRIPTION
G	C231034	2023/08/08	Ruru	G XI
H	C241122	2024/10/26	Henry	H XI
I	C251212	2025/09/26	Vicky	I XI

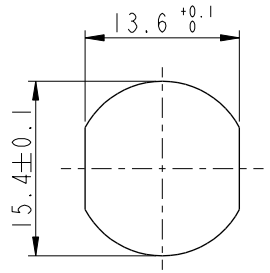

Recommended Panel Cut-Out

B D

C D

M12B-XXPFFS-SF8001

XX: No. Of Pin

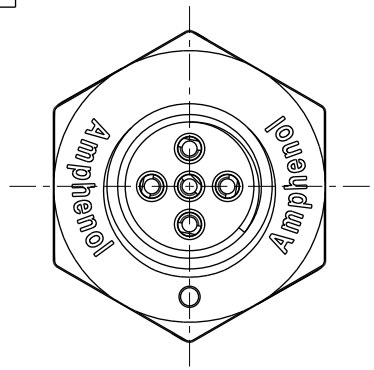

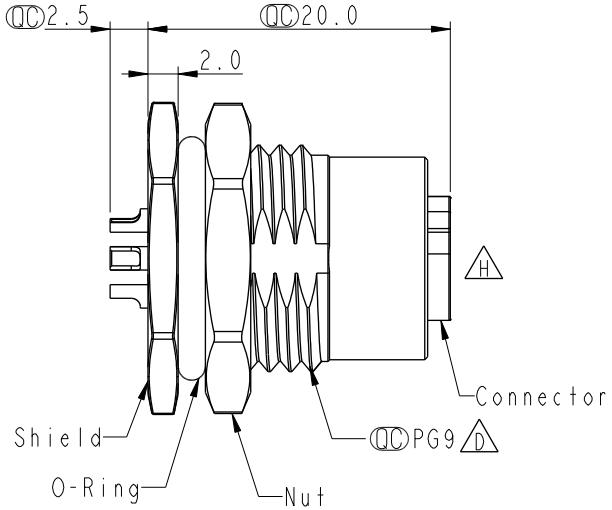

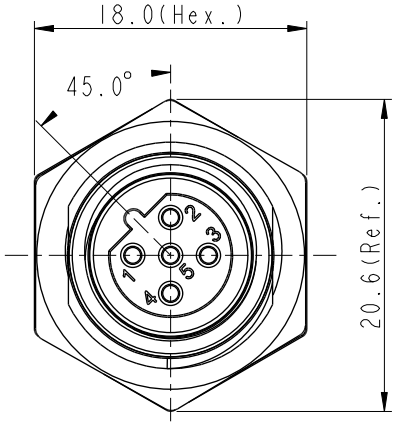

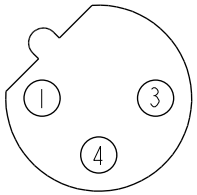

3P

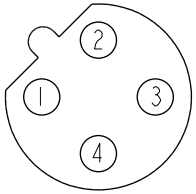

4P

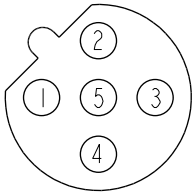

5P

Pin Assignment Front View

C

D E Note:
- * RoHS Compliant
- * QC Important dimension
- C F * Waterproof rate: IP68, unmated 1m/24h
  - G IP69K, mated
- * Connector
  - Housing: Thermoplastic, Black
  - Pin: Copper alloy, Gold plated
  - O-Ring: Rubber, Green
- * Shield: Metal
- * Nut: Metal
- * O-Ring: Rubber, Black
- * For panel thickness max: 4.5mm
- I * The Nut Is Packed Separately In The Bag

UNIT: mm

TOLERANCE

.X	±0.25
.XX	±0.1
.XXX	±0.05
ANGLES	±1°

TITLE: N SEN, M12 B, SCREW RECEPTACLE, F, F, SOLDER E

SCALE: 2:1 | SIZE: A4 | SHEET 1 OF 1

REV. 1 | WC-REV. A.5 | QC: Inspection item

Amphenol LTW

安費諾亮泰企業股份有限公司

ITEM NO	DRAWN BY: Vicky	DATE: 2025-09-26
DWG NO: D M12B-XXPFFS-SF8001	CHECKED BY: Ruru	DATE: 2025-09-26
CUSTOMER: ALTW	APPROVED BY: Rita	DATE: 2025-09-26

THIS DOCUMENT IS SUBJECT TO CHANGE WITHOUT NOTICE. IT IS CONFIDENTIAL AND A PROPERTY OF Amphenol LTW. DISCLOSURE TO THIRD PARTY HAS TO BE AUTHORIZED BY Amphenol LTW.