REV.	ECN NO.	DATE	SIGN	DESCRIPTION
G	C221973	2022/12/22	Ruru	G XI
H	C231034	2023/08/08	Ruru	H XI
I	C251212	2025/09/26	Vicky	I XI

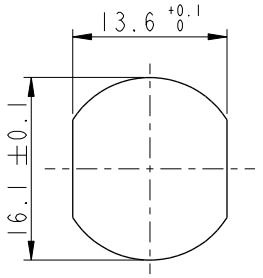

Recommended Panel Cut-Out

B

D

M12A-XXPMMS-SH8002

XX: No. Of Pin

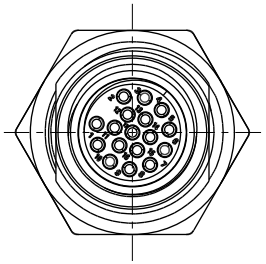

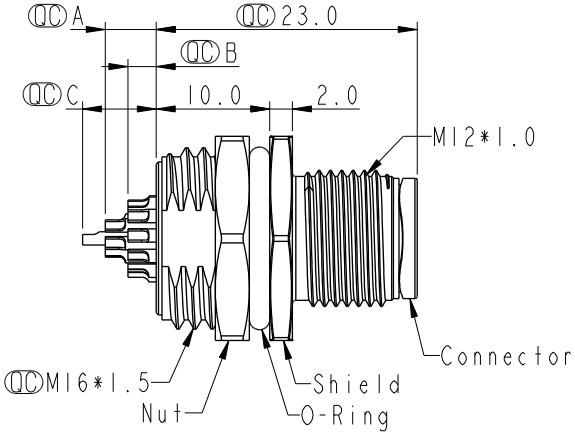

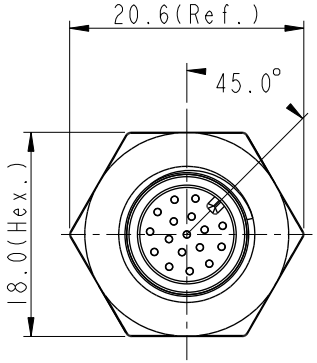

Item No.	A	B	C	
	Pin伸出長度			
M12A-03PMMS-SH8002		2.5		
M12A-04PMMS-SH8002		2.5		
M12A-05PMMS-SH8002		2.5		
M12A-06PMMS-SH8002		2.5		C
M12A-08PMMS-SH8002		2.5		
M12A-10PMMS-SH8002	4.5	2.5		
M12A-12PMMS-SH8002	4.5	2.5		
M12A-17PMMS-SH8002	4.5	2.5	6.5	D

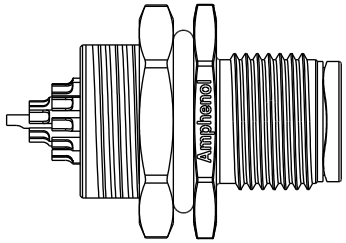

D F Note:
- * RoHS Compliant
- * QC Important dimension
- C G * Waterproof rate: IP68, unmated 1m/24h
  - H IP69K, mated
- * Connector
  - Housing: Thermoplastic, Black
  - Pin: Copper alloy, Gold plated
- E * Shield: Metal
- E * Nut: Metal
- * O-Ring: Rubber, Black
- * For panel thickness max: 4.5mm
- I * The Nut Is Packed Separately In The Bag

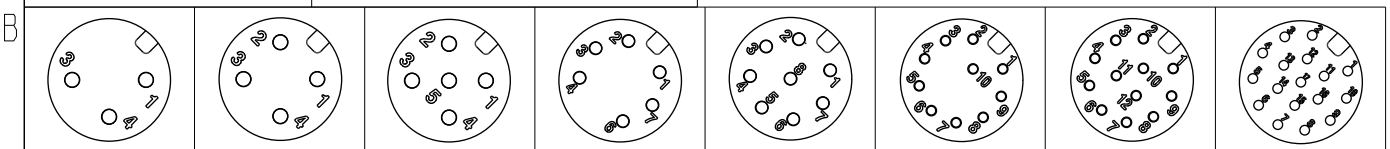

Pin Assignment Front View

UNIT: mm

TOLERANCE
.X ±0.25
.XX ±0.1
.XXX ±0.05
ANGLES ±1°

TITLE: N SEN, M12 A, SCREW RECEPTACLE, M, M, SOLDER F

SCALE 1:1 | SIZE A4 | SHEET 1 OF 1

REV. 1 | WC-REV. A.5 | QC: Inspection item

Amphenol LTW

安費諾亮泰企業股份有限公司

ITEM NO	DRAWN BY: Vicky	DATE: 2025-09-26
DWG NO: D M12A-XXPMMS-SH8002	CHECKED BY: Ruru	DATE: 2025-09-26
CUSTOMER: ALTW	APPROVED BY: Rita	DATE: 2025-09-26

THIS DOCUMENT IS SUBJECT TO CHANGE WITHOUT NOTICE. IT IS CONFIDENTIAL AND A PROPERTY OF Amphenol LTW. DISCLOSURE TO THIRD PARTY HAS TO BE AUTHORIZED BY Amphenol LTW.