AS85049 Boots

M85049/141 Right Angle, Low Profile Heat Shrink Boot



AS85049 lipped, right angle low profile shrink boots provide mechanical and environmental protection from damage and debris. AS85049 right angle boots are made in accordance with AS85049 and fit standard boot adapters for circular connectors. All adhesive lined and unlined shrink books are RoHS compliant. Shrink boots are water-tight when equipped with factory installed or user-installed adhesive. Lipped boots lock into boot groove located on adapter and can be ordered with potting holes to fit your requirements. Choose boot size based on adapter diameter and cable diameter.

How to Order						
Sample Part Number	**M85049/141**	**-10**	**H**	**C**	**D**	**P**
Product Series	**M85049/141** = right angle, low profile AS85049 boot					
Dash No.	**09**, **10**, **11**, **12**, **13**, **14**, **15**, **16**, **17**, **18**; see dimension table					
Material	**A**, **B**, **G**, **H**; see material table					
Adhesive Option	**C** = adhesive lined, see adhesive table **U** = no adhesive					
Drain Holes	**D** = drain holes **Omit** for none					
Injection-Vent Ports	**P** = injection-vent port **Omit** for none					

Material			
Material	**Compound**	**Material Description**	**Color Code**
A	2071	Polyolefin Semi-Rigid	White
B	2040	Polyolefin Flexible	Red
G	2010	Polyolefin	Green
H	2025	Elastomeric	Blue

Adhesive		
Code	**Material**	**Description**
C	Material A, G, H	-55° to +125°C Hot Melt adhesive
	Material B	-55° to +70°C Zero Halogen/Hot Melt
	For applications exposed to temperatures reaching 150°C contact the factory	

NOTES

1. See bag identification for matching boot number, no number on boot. See part number development for full description
2. Encircled material letter designator located on O.D. approximately mid length along the 'J" end see part number development for full description
3. Recovered dimension apply to unrestricted recovery. Dimensions may differ than shown when boots are installed over assembly.

© 2017 Glenair, Inc • 1211 Air Way, Glendale, CA 91201 • 818-247-6000 • www.glenair.com • Series 77 Full Nelson Shrink Boot Catalog
U.S. CAGE code 06324 • Dimensions in Inches (millimeters) are subject to change without notice.

AS85049 Boots

M85049/141 Right Angle, Low Profile Heat Shrink Boot

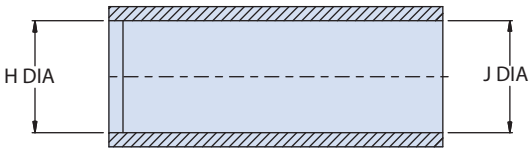

AS SUPPLIED

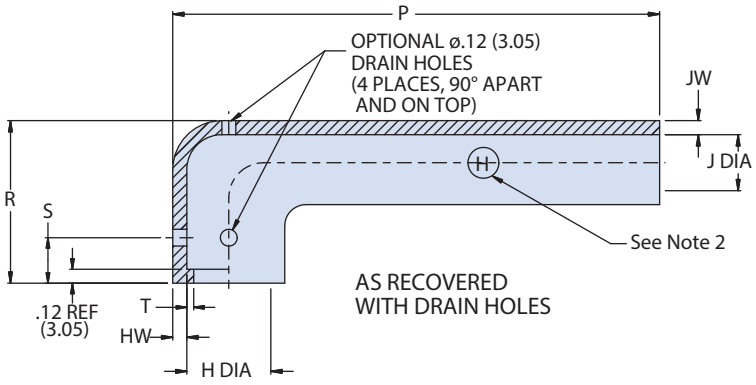

AS RECOVERED
WITH DRAIN HOLES

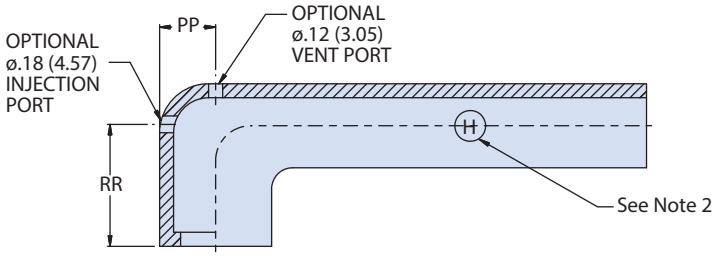

AS RECOVERED
WITH INJECTION-VENT PORT

REF: AS85049/141
(FIG. 2 90° LOW PROFILE BOOT)

Dimensions													
Dash No. 1	H Dia Min*	H Dia Max**	J Dia Min* Material A,B,H	J Dia Max*** Material G	J Dia Max**	P** ±10%	R** Ref	T** Ref	HW** ±20%	JW Max**	S** ±10%	PP** ±10%	RR** ±10%
09	0.88 (22.4)	0.45 (11.4)	0.88 (22.4)	0.55 (14.0)	0.25 (6.4)	4.14 (105.2)	0.73 (18.5)	0.04 (1.0)	0.06 (1.5)	0.06 (1.5)	0.47 (11.9)	0.27 (6.9)	0.49 (12.4)
10	1.01 (25.7)	0.59 (15.0)	1.01 (25.7)	0.63 (16.0)	0.30 (7.6)	4.88 (124.0)	0.78 (19.8)	0.04 (1.0)	0.06 (1.5)	0.06 (1.5)	0.47 (11.9)	0.33 (8.4)	0.59 (15.0)
11	1.16 (29.5)	0.74 (18.8)	1.16 (29.5)	0.72 (18.3)	0.33 (8.4)	5.76 (146.3)	0.82 (20.8)	0.04 (1.0)	0.07 (1.8)	0.06 (1.5)	0.47 (11.9)	0.41 (10.4)	0.61 (15.5)
12	1.34 (34.0)	0.90 (22.9)	1.34 (34.0)	0.84 (21.3)	0.39 (9.9)	6.78 (172.2)	0.86 (21.8)	0.04 (1.0)	0.07 (1.8)	0.06 (1.5)	0.47 (11.9)	0.48 (12.2)	0.62 (15.7)
13	1.47 (37.3)	1.16 (29.5)	1.47 (37.3)	0.91 (23.1)	0.43 (10.9)	7.29 (185.2)	0.96 (24.4)	0.07 (1.8)	0.08 (2.0)	0.06 (1.5)	0.47 (11.9)	0.61 (15.5)	0.70 (17.8)
14	1.72 (43.7)	1.34 (34.0)	1.72 (43.7)	1.07 (27.2)	0.48 (12.2)	8.41 (213.6)	1.08 (27.4)	0.07 (1.8)	0.08 (2.0)	0.06 (1.5)	0.47 (11.9)	0.72 (18.3)	0.78 (19.8)
15	1.97 (50.0)	1.62 (41.1)	1.97 (50.0)	1.24 (31.5)	0.57 (14.5)	8.84 (224.5)	1.16 (29.5)	0.07 (1.8)	0.09 (2.3)	0.06 (1.5)	0.47 (11.9)	0.83 (21.1)	0.82 (20.8)
16	2.47 (62.7)	1.85 (47.0)	2.47 (62.7)	1.54 (39.1)	0.71 (18.0)	8.95 (227.3)	1.31 (33.3)	0.08 (2.0)	0.10 (2.5)	0.06 (1.5)	0.63 (16.0)	0.95 (24.1)	0.92 (23.4)
17	2.73 (69.3)	2.35 (59.7)	2.73 (69.3)	1.70 (43.2)	0.79 (20.1)	9.19 (233.4)	1.38 (35.1)	0.08 (2.0)	0.10 (2.5)	0.06 (1.4)	0.63 (16.0)	1.18 (30.0)	0.93 (23.6)
18	3.22 (81.8)	2.64 (67.1)	3.22 (81.8)	2.01 (51.1)	0.91 (23.1)	9.33 (237.0)	1.75 (44.5)	0.08 (2.0)	0.10 (2.5)	0.06 (1.4)	0.63 (16.0)	1.31 (33.3)	1.23 (31.2)

* As Supplied ** As Recovered *** Glenair G material can meet the same AS SUPPLIED J Dia dimensions as material A, B, and H

© 2017 Glenair, Inc • 1211 Air Way, Glendale, CA 91201 • 818-247-6000 • www.glenair.com • Series 77 Full Nelson Shrink Boot Catalog
U.S. CAGE code 06324 • Dimensions in Inches (millimeters) are subject to change without notice.

REV. 06.19.26