Series 31 Shrink Boot Adapters

for MIL-DTL-38999 Series III and IV Connectors

319H*001 Shrink Boot Adapter, Braid Sock

Adapter Code H

This accessory fits these connectors:
MIL-DTL-38999 Series III and Series IV

PROFILE SELECTION GUIDE

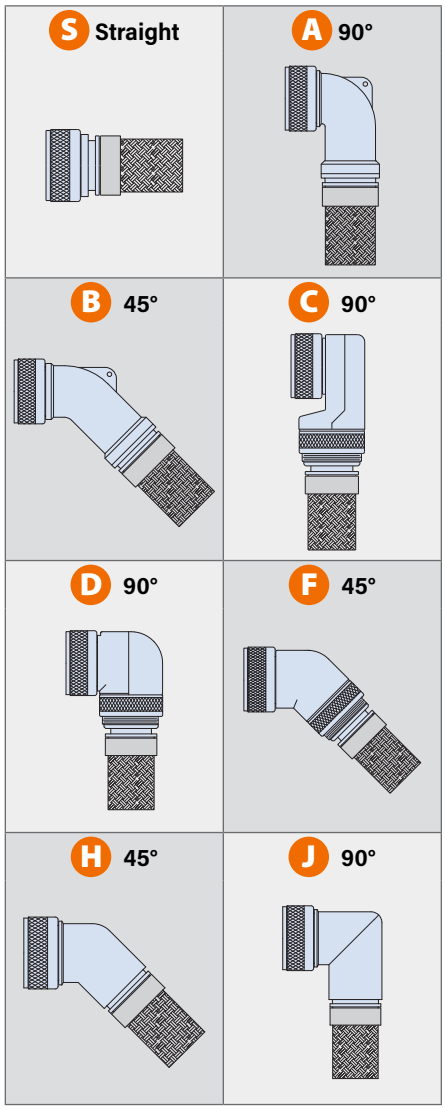

Braid Sock. 319H*001 shrink boot adapter with braid sock fits MIL-DTL-38999 Series III and IV connectors. Adapter has braid attached with crimp ring. install optional lipped shrink boot for environmental protection. Supplied as adapter only or as kit with shrink boot. Aluminum or stainless steel. Tin-plated copper crimp ring. Braid is 36 AWG tinned copper per A-A-59569.

PART NUMBER

319HS001	NF	11	04	-6	T

Base P/N

Base Part No.	Profile
319HS001	S Straight
319HA001	A 90° Elbow
319HB001	B 45° Elbow
319HC001	C 90° Low Prof.
319HD001	D 90° Split
319HF001	F 45° Split
319HH001	H 45° Cut/Weld
319HJ001	J 90° Cut/Weld

Material/Finish

M	Alum/ Electroless Nickel
MT	Alum/ Nickel-PTFE
NF	Alum/ Olive Drab Cadmium
ZR	Alum/ Black Zinc-Nickel
TZ	Alum/ Tin-Zinc
Z1	SST/ Passivated *(Profiles H, J, S only)*

Shell Size

Shell Size	9	11	13	15	17	19	21	23	25
	A	B	C	D	E	F	G	H	J
Size Code	09	11	13	15	17	19	21	23	25

Entry Size

Size	Cable Entry ± .015 (0.4)	Shell Sizes*	Size	Cable Entry ± .015 (0.4)	Shell Sizes*
01	.188 (4.8)	09-25	10	.750 (19.1)	17-25
02	.250 (6.4)	09-25	11	.812 (20.6)	19-25
03	.312 (7.9)	11-25	12	.875 (22.2)	19-25
04	.375 (9.5)	11-25	13	.938 (23.8)	21-25
05	.438 (11.1)	13-25	14	1.000 (25.4)	21-25
06	.500 (12.7)	13-25	22	1.062 (27.0)	23-25
07	.562 (14.3)	15-25	19	1.125 (28.6)	23-25
08	.625 (15.9)	15-25	23	1.188 (30.2)	25
09	.688 (17.5)	17-25	15	1.250 (31.8)	25

** If selected entry size exceeds shell size range, a **Style 2** transition a)dapter will be included.See **Maximum Entry Size** for details. ⚠ **Profile C entry size cannot exceed shell size range listed in table.***

Braid Length

Braid length in 1 inch increments, 4 inch minimum

Shrink Boot

Omit if not required

T	Shrink Boot included

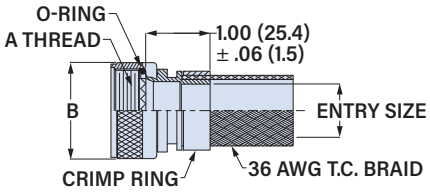

Shell Size	A Thread	øB Max in	øB Max mm	Max Entry Size
9 (A)	M12X1.0-6H	.770	19.6	02
11 (B)	M15X1.0-6H	.840	21.3	04
13 (C)	M18X1.0-6H	.960	24.4	06
15 (D)	M22X1.0-6H	1.090	27.7	08
17 (E)	M25X1.0-6H	1.230	31.2	10
19 (F)	M28X1.0-6H	1.360	34.5	12
21 (G)	M31X1.0-6H	1.480	37.6	14
23 (H)	M34X1.0-6H	1.600	40.6	19
25 (J)	M37X1.0-6H	1.720	43.7	15

© 2022 Glenair, Inc • 1211 Air Way, Glendale, CA 91201 • 818-247-6000 • www.glenair.com • U.S. CAGE code 06324 • Circular Connector Accessories
Dimensions in Inches (millimeters) are subject to change without notice.

Series 31 Shrink Boot Adapters

for MIL-DTL-38999 Series III and IV Connectors

319H*001 Shrink Boot Adapter, Braid Sock

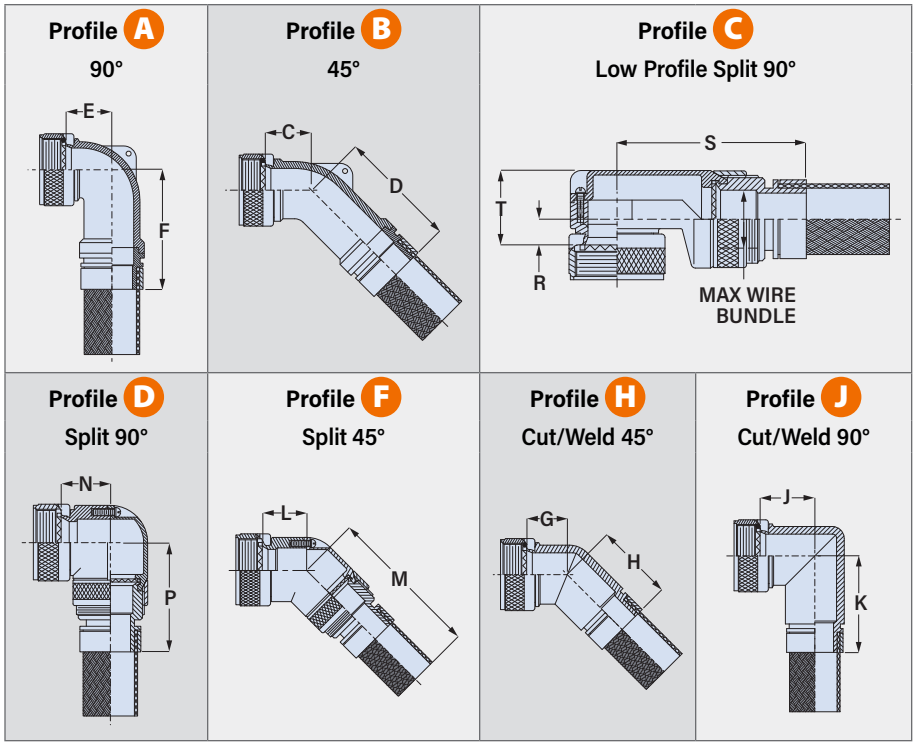

Shell Size	C Max in	C Max mm	D Max in	D Max mm	E Max in	E Max mm	F Max in	F Max mm	G Max in	G Max mm	H Max in	H Max mm	J Max in	J Max mm	K Max in	K Max mm
9 (A)	.457	11.6	1.71	43.4	.500	12.7	1.730	43.9	.830	21.1	1.045	26.5	.940	23.9	1.188	29.3
11 (B)	.520	13.2	1.77	45.0	.595	15.1	1.850	47.0	.860	21.8	1.075	27.3	1.010	25.7	1.225	31.1
13 (C)	.582	14.8	1.83	46.5	.610	15.5	1.870	47.5	.882	22.4	1.097	27.9	1.070	27.2	1.285	32.6
15 (D)	.645	16.4	1.92	48.8	.700	17.8	1.940	49.3	.900	22.9	1.125	28.6	1.130	28.7	1.345	34.2
17 (E)	.738	18.7	2.03	51.6	.885	22.5	2.030	51.6	.930	23.6	1.145	29.1	1.190	30.2	1.405	35.7
19 (F)	.926	23.5	2.22	56.4	.975	24.8	2.200	55.9	.950	24.1	1.165	29.6	1.240	31.5	1.455	37.0
21 (G)	.926	23.5	2.22	56.4	.975	24.8	2.200	55.9	.980	24.9	1.195	30.4	1.310	33.3	1.525	38.7
23 (H)	1.020	25.9	2.37	60.2	1.125	28.6	2.310	58.7	1.000	25.4	1.215	30.9	1.360	34.5	1.575	40.0
25 (J)	1.020	25.9	2.37	60.2	1.125	28.6	2.310	58.7	1.030	26.2	1.245	31.6	1.430	36.3	1.645	41.8

Shell Size	L Max in	L Max mm	M Max in	M Max mm	N Max in	N Max mm	P Max in	P Max mm	R Ref in	R Ref mm	S Max in	S Max mm	T Max in	T Max mm	Max Wire Bundle in	Max Wire Bundle mm
9 (A)	.440	11.2	1.500	38.1	.680	17.3	1.440	36.6	.340	8.6	1.780	45.2	.681	17.3	.250	6.4
11 (B)	.500	12.7	1.560	39.6	.750	19.1	1.500	38.1	.270	6.9	1.940	49.3	.731	18.6	.375	9.5
13 (C)	.560	14.2	1.630	41.4	.810	20.6	1.570	39.9	.270	6.9	1.940	49.3	.731	18.6	.375	9.5
15 (D)	.620	15.7	1.660	42.2	.870	22.1	1.600	40.6	.280	7.1	2.010	51.1	.831	21.1	.500	12.7
17 (E)	.680	17.3	1.760	44.7	.930	23.6	1.700	43.2	.420	10.7	2.060	52.3	.981	24.9	.625	15.9
19 (F)	.750	19.1	1.820	46.2	1.000	25.4	1.760	44.7	.640	16.3	2.090	53.1	1.181	30.0	.625	15.9
21 (G)	.820	20.8	1.880	47.8	1.060	26.9	1.820	46.2	.640	16.3	2.090	53.1	1.181	30.0	.625	15.9
23 (H)	.880	22.4	1.940	49.3	1.120	28.4	1.880	47.8	.540	13.7	2.240	56.9	1.181	30.0	.750	19.1
25 (J)	.940	23.9	2.000	50.8	1.180	30.3	1.940	49.3	.540	13.7	2.240	56.9	1.181	30.0	.750	19.1

SHRINK BOOT

Optional heatshrink boot provides cable strain relief and environmental protection. Type 1 high-performance semi-rigid elastomer resists fuels and oils and withstands temperature extremes.

Entry Size	Shrink Boot P/N
01-02	770-003S111
03-05	770-001S103
06-08	770-001S104
09-11	770-001S105
12-14	770-001S106
15	770-001S107
16-17	770-001S108
18	770-001S109
19-20	770-001S107
21	770-001S108
22	770-001S106
23	770-001S107

MAXIMUM ENTRY SIZE

If the selected entry size exceeds the maximum size in this table, the backshell will have a front adapter. This is called a ***Style 2*** backshell.

Shell Size	Max Entry Size	Shell Size	Max Entry Size
09	02	19	12
11	04	21	14
13	06	23	19
15	08	25	15
17	10		

Style 2 Straight Backshell

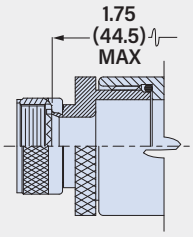

For Style 2 straight backshells, the front adapter adds ½ inch to the length.

Style 2 45° and 90° Backshells

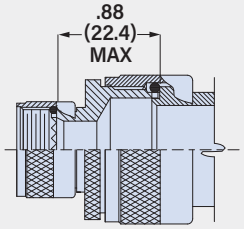

For Style 2 45° and 90° backshells, the length increases by .88 inch.