TimerCamera-F

SKU:U082-F

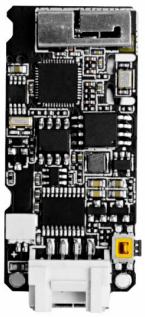

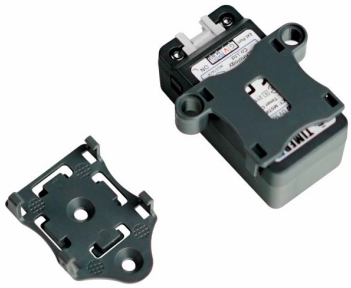

Description

TimerCamera-F is a fisheye camera module based on ESP32-D0WDQ6-V3, with onboard 8M PSRAM and 4M Flash. It features a 3MP camera (OV3660) with a DFOV of 120°, capable of capturing photos at a maximum resolution of 2048x1536. The camera is designed with ultra-low power consumption in mind, with an integrated RTC (BM8563) that exposes the IRQ signal for device sleep and timed wake-up (sleep current can be as low as 2μA). With timed photo capture (one photo per hour), the built-in 270mAh battery can provide over a month of battery life. The module supports WiFi image transmission and USB port debugging, with a HY2.0-4P port output at the bottom for

expanding other peripherals. The onboard LED status indicator and reset button facilitate program development and debugging. In terms of applications, M5Stack provides some simple and efficient application development methods and interfaces for the TimerCAM series, offering convenience for user usage and development. (Including PC/Mobile photo capture apps, cloud-based HTTP interfaces for timed photo capture, etc.)

Features

- ESP32-based design
- WiFi image transmission
- Timed sleep and wake-up
- Status indicator
- Ultra-low power design
- Built-in 270mAh battery
- Programming platforms: ESP-IDF/Arduino/UIFlow

Includes

- 1 x TimerCamera-F
- 1 x LEGO Adapter
- 1 x Wall-1515
- 1 x USB Type-C cable (20cm)

Applications

- Timed photo capture
- Remote monitoring

Specifications

Specification	Parameter
PSRAM	8MB Quad
Flash	4M
Battery	270mAh
Image Sensor	OV3660
Maximum Resolution	3MP
Output Format	8-/10-Bit RAW, RGB and YCbCr output, compression.
DFOV	120°
Product Size	48.0 x 24.0 x 23.3mm
Product Weight	21.4g
Package Size	75.0 x 46.0 x 30.0mm
Gross Weight	43.8g

Learn

> The Timer Camera series uses a low-power power management solution different from CORE and StickC devices. When in use, the PWR button is used as the power button (press and hold for 2s). To turn off the device, you need to use the software API or press the reset button on the PCB. When using external power, the device will remain powered on.

Fisheye Lens vs. Standard Lens Imaging Comparison

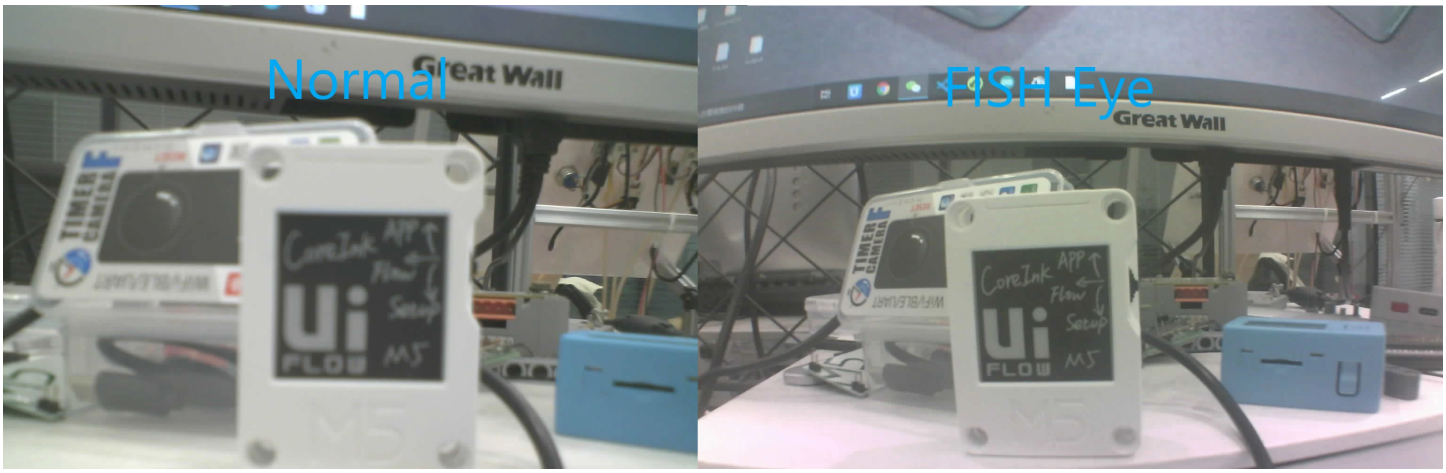

Schematics

- TimerCamera-F Schematics PDF

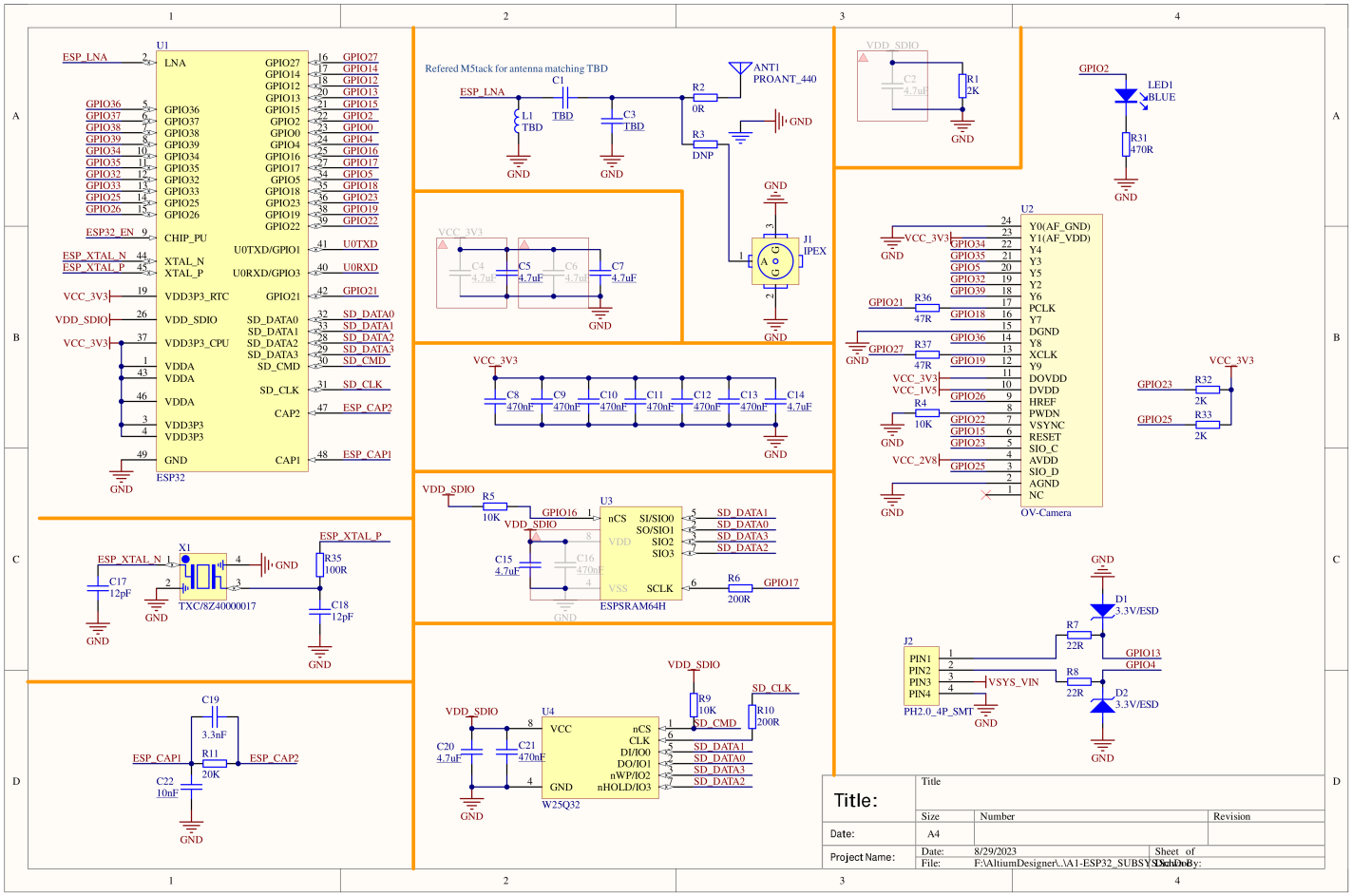
U1
ESP32
LNA
CHIP_PU
XTAL_N
XTAL_P
VDD3P3_RTC
VDD_SDIO
VDD3P3_CPU
VDDA
VDDA
VDDA
VDD3P3
VDD3P3
GND
GPIO27
GPIO14
GPIO12
GPIO13
GPIO15
GPIO2
GPIO0
GPIO4
GPIO16
GPIO17
GPIO5
GPIO18
GPIO23
GPIO19
GPIO22
U0TXD/GPIO1
U0RXD/GPIO3
GPIO21
SD_DATA0
SD_DATA1
SD_DATA2
SD_DATA3
SD_CMD
SD_CLK
CAP2
CAP1
ESP_LNA
GPIO36
GPIO37
GPIO38
GPIO39
GPIO34
GPIO35
GPIO32
GPIO33
GPIO25
GPIO26
ESP32_EN
ESP_XTAL_N
ESP_XTAL_P
VCC_3V3
VDD_SDIO
VCC_3V3
U0TXD
U0RXD
GPIO21
ESP_CAP2
ESP_CAP1
Refered M5stack for antenna matching TBD
ESP_LNA
C1
TBD
L1
TBD
C3
TBD
R2
0R
R3
DNP
ANT1
PROANT_440
J1
IPEX
C4
4.7uF
C5
4.7uF
C6
4.7uF
C7
4.7uF
C8
470nF
C9
470nF
C10
470nF
C11
470nF
C12
470nF
C13
470nF
C14
4.7uF
VDD_SDIO
R5
10K
GPIO16
U3
ESPSRAM64H
nCS
VDD
VSS
SI/SIO0
SO/SIO1
SIO2
SIO3
SCLK
C15
4.7uF
C16
470nF
R6
200R
GPIO17
SD_DATA1
SD_DATA0
SD_DATA3
SD_DATA2
X1
TXC/8Z40000017
ESP_XTAL_N
ESP_XTAL_P
C17
12pF
C18
12pF
R35
100R
C19
3.3nF
R11
20K
C22
10nF
ESP_CAP1
ESP_CAP2
U4
W25Q32
VCC
nCS
CLK
DI/IO0
DO/IO1
nWP/IO2
GND
nHOLD/IO3
C20
4.7uF
C21
470nF
R9
10K
R10
200R
SD_CLK
SD_CMD
SD_DATA1
SD_DATA0
SD_DATA3
SD_DATA2
VDD_SDIO
C2
4.7uF
R1
2K
GPIO2
LED1
BLUE
R31
470R
U2
OV-Camera
Y0(AF_GND)
Y1(AF_VDD)
Y4
Y3
Y5
Y2
Y6
PCLK
Y7
DGND
Y8
XCLK
Y9
DOVDD
DVDD
HREF
PWDN
VSYNC
RESET
SIO_C
AVDD
SIO_D
AGND
NC
VCC_3V3
GPIO34
GPIO35
GPIO5
GPIO32
GPIO39
GPIO21
R36
47R
GPIO18
GPIO27
R37
47R
GPIO36
GPIO19
VCC_3V3
VCC_1V5
GPIO26
R4
10K
GPIO22
GPIO15
GPIO23
VCC_2V8
GPIO25
GPIO23
R32
2K
GPIO25
R33
2K
J2
PH2.0_4P_SMT
PIN1
PIN2
PIN3
PIN4
VSYS_VIN
D1
3.3V/ESD
D2
3.3V/ESD
R7
22R
R8
22R
GPIO13
GPIO4
Title:
Size
Number
Revision
Date:
A4
Project Name:
Date: 8/29/2023
Sheet of
File: F:\AltiumDesigner\...\A1-ESP32_SUBSYSTEM.SchDoc
Drawn By:

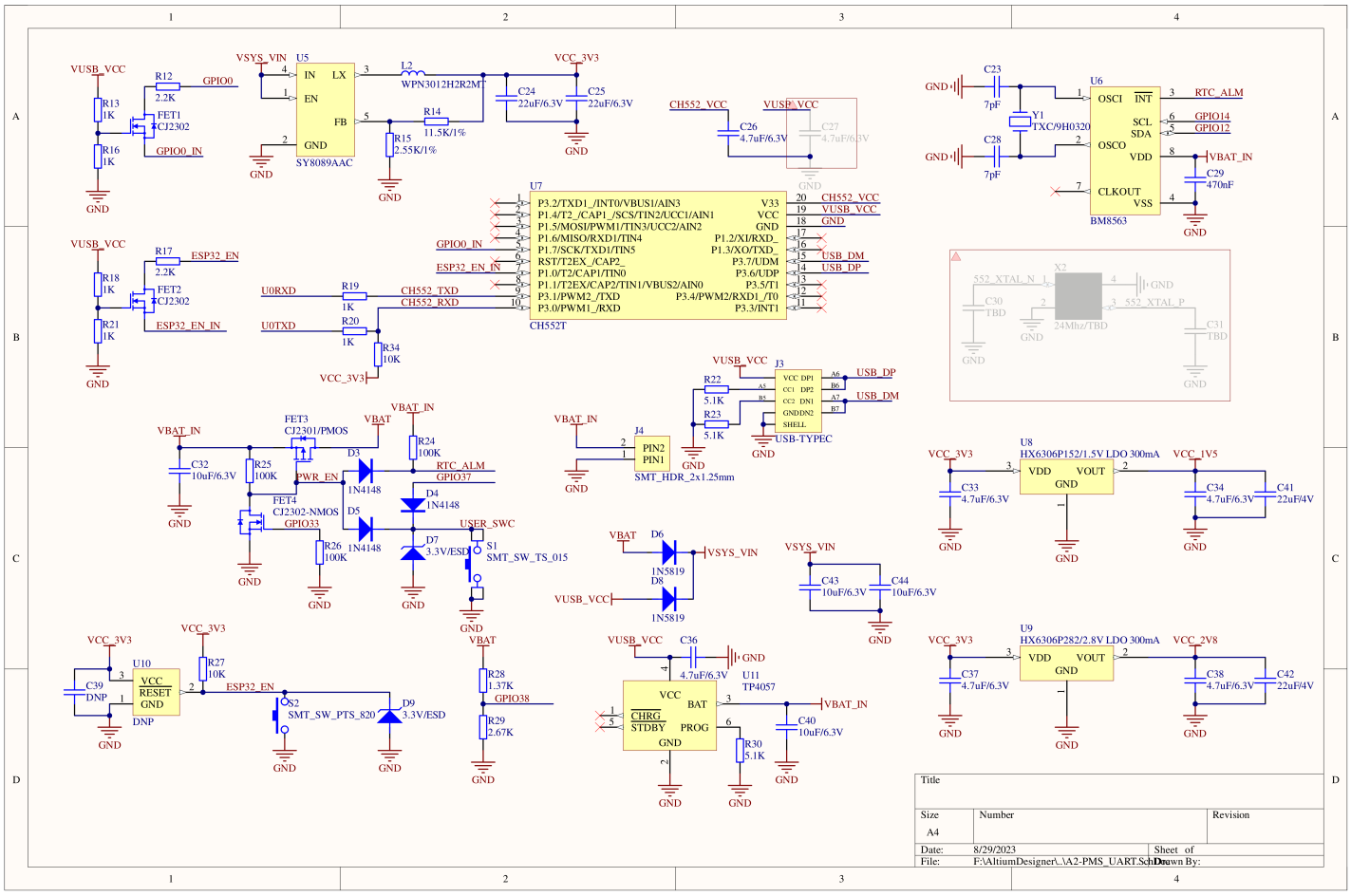
VUSB_VCC
R12
2.2K
GPIO0
R13
1K
FET1
CJ2302
R16
1K
GPIO0_IN
VSYS_VIN
U5
SY8089AAC
IN
EN
FB
GND
LX
L2
WPN3012H2R2MT
R14
11.5K/1%
R15
2.55K/1%
VCC_3V3
C24
22uF/6.3V
C25
22uF/6.3V
CH552_VCC
C26
4.7uF/6.3V
VUSB_VCC
C27
4.7uF/6.3V
U7
CH552T
P3.2/TXD1_/INT0/VBUS1/AIN3
P1.4/T2_/CAP1_/SCS/TIN2/UCC1/AIN1
P1.5/MOSI/PWM1/TIN3/UCC2/AIN2
P1.6/MISO/RXD1/TIN4
P1.7/SCK/TXD1/TIN5
RST/T2EX_/CAP2_
P1.0/T2/CAP1/TIN0
P1.1/T2EX/CAP2/TIN1/VBUS2/AIN0
P3.1/PWM2_/TXD
P3.0/PWM1_/RXD
V33
VCC
GND
P1.2/XI/RXD_
P1.3/XO/TXD_
P3.7/UDM
P3.6/UDP
P3.5/T1
P3.4/PWM2/RXD1_/T0
P3.3/INT1
CH552_VCC
VUSB_VCC
GND
USB_DM
USB_DP
GPIO0_IN
ESP32_EN_IN
U0RXD
U0TXD
R19
1K
R20
1K
CH552_TXD
CH552_RXD
R34
10K
VCC_3V3
VUSB_VCC
R17
2.2K
ESP32_EN
R18
1K
FET2
CJ2302
R21
1K
ESP32_EN_IN
GND
C23
7pF
C28
7pF
Y1
TXC/9H0320
U6
BM8563
OSCI
OSCO
INT
SCL
SDA
VDD
CLKOUT
VSS
RTC_ALM
GPIO14
GPIO12
VBAT_IN
C29
470nF
X2
24Mhz/TBD
552_XTAL_N
552_XTAL_P
C30
TBD
C31
TBD
VUSB_VCC
J3
USB-TYPEC
VCC
DP1
CC1
DP2
CC2
DN1
GND
DN2
SHELL
A6
B6
A7
B7
USB_DP
USB_DM
R22
5.1K
R23
5.1K
VBAT_IN
J4
SMT_HDR_2x1.25mm
PIN2
PIN1
VBAT_IN
FET3
CJ2301/PMOS
VBAT
C32
10uF/6.3V
R25
100K
PWR_EN
D3
1N4148
R24
100K
RTC_ALM
GPIO37
D4
1N4148
FET4
CJ2302-NMOS
GPIO33
D5
1N4148
R26
100K
USER_SWC
D7
3.3V/ESD
S1
SMT_SW_TS_015
VBAT
D6
1N5819
D8
1N5819
VSYS_VIN
VUSB_VCC
VSYS_VIN
C43
10uF/6.3V
C44
10uF/6.3V
U8
HX6306P152/1.5V LDO 300mA
VDD
VOUT
GND
VCC_3V3
C33
4.7uF/6.3V
VCC_1V5
C34
4.7uF/6.3V
C41
22uF/4V
U9
HX6306P282/2.8V LDO 300mA
VCC_3V3
C37
4.7uF/6.3V
VCC_2V8
C38
4.7uF/6.3V
C42
22uF/4V
VCC_3V3
U10
VCC
RESET
GND
C39
DNP
DNP
VCC_3V3
R27
10K
ESP32_EN
S2
SMT_SW_PTS_820
D9
3.3V/ESD
VBAT
R28
1.37K
GPIO38
R29
2.67K
VUSB_VCC
C36
4.7uF/6.3V
U11
TP4057
VCC
CHRG
STDBY
BAT
PROG
GND
VBAT_IN
C40
10uF/6.3V
R30
5.1K
Title
Size
Number
Revision
A4
Date: 8/29/2023
Sheet of
File: F:\AltiumDesigner\...\A2-PMS_UART.SchDoc
Drawn By:

PinMap

OV3660

Interface	Camera Pin	TimerCamera
SCCB Clock	SIOC	G23
SCCB Data	SIOD	G25
System Clock	XCLK	G27
Vertical Sync	VSYNC	G22
Horizontal Reference	HREF	G26
Pixel Clock	PCLK	G21
Pixel Data Bit 0	D0	G32
Pixel Data Bit 1	D1	G35
Pixel Data Bit 2	D2	G34
Pixel Data Bit 3	D3	G5
Pixel Data Bit 4	D4	G39
Pixel Data Bit 5	D5	G18
Pixel Data Bit 6	D6	G36
Pixel Data Bit 7	D7	G19
Camera Reset	RESET	G15
Camera Power Down	PWDN	-1
Power Supply 3.3V	3V3	3V3
Ground	GND	GND

HY2.0-4P

HY2.0-4P	TimerCamera
SCL	G13
SDA	G4
5V	5V
GND	GND

LED

LED	TimerCamera
LED_Pin	G2

BM8563

BM8563	TimerCamera
SCL	G14
SDA	G12

BAT

BAT	TimerCamera
BAT_ADC_Pin	G38
BAT_HOLD_Pin	G33

Datasheets

- ESP32-D0WDQ6-V3
- OV3660

Model Size

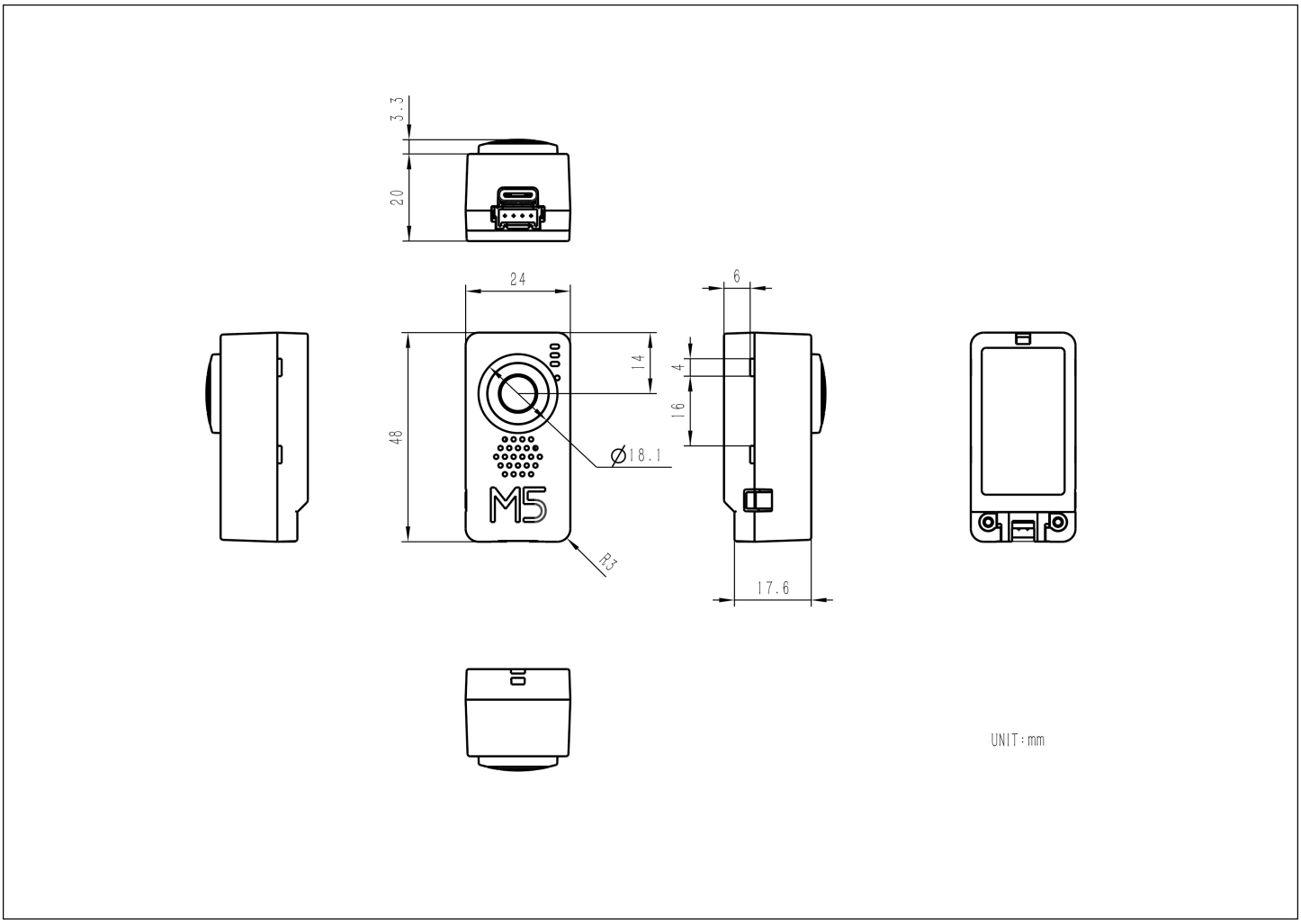

Structure

- TimerCamera-F Structure Files

Softwares

Quick Start

- Camera-Tool Guide
- UIFlow-Media Trans
- UIFlow-UART/TIMER
- Arduino Quick Start
- Timer Folder Pusher
- Timer Amazon S3 Folder Pusher

Arduino

- TimerCamera Arduino Library

ESP-IDF

- Fish-Eye-FactoryTest
- AWS-S3-PUT
- Ali-OSS-PUT
- SMB-OSS-PUT
- Timer Wakeup
- HTTP Stream
- Wireless-send

Home Assistant

- TimerCamera Series Home Assistant Integration

Undervoltage/Power Loss Protection

> When the device is undervoltage, the camera may trigger undervoltage protection, causing a reset.

ESP-IDF

ESP-IDF can be configured in menuconfig during project compilation to disable this feature.

```
idf.py menuconfig
```

Component config->**ESP32-specific**->**Hardware brownout detect & reset** (disable)

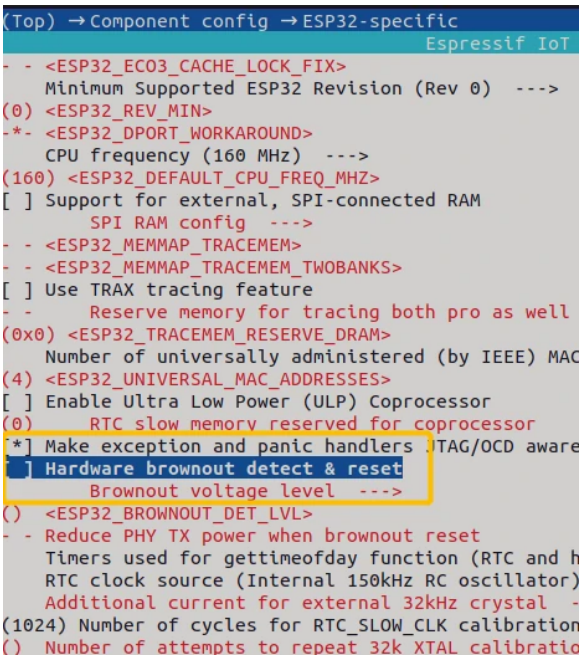

Arduino

On the Arduino platform, you can disable this feature during initialization with the following example code.

```
#include "soc/soc.h"
#include "soc/rtc_cntl_reg.h"

void setup() {
  WRITE_PERI_REG(RTC_CNTL_BROWN_OUT_REG, 0); //disable detector
}
```

USB Driver

TimerCamera-F may not work without a driver on some systems. You can resolve this issue by manually installing the FTDI VCP driver. Follow these steps:

1. Select and download the driver file matching your operating system from the list below, then extract it. You can also visit the FTDI Chip official website to get additional FTDI driver versions.

Driver name	Download link
Windows_Desktop_x64	Download
Windows_Desktop_x86_32	Download
Windows_Desktop_ARM	Download
MacOS_Intel	Download
MacOS_ARM64	Download

2. Connect the device to your PC, open Device Manager, and install the FTDI driver (the screenshot below uses Windows 10 as an example). (Note: On some systems, you may need to install the driver twice for it to take effect. The unrecognized device is usually named `M5Stack` or `USB Serial`.)

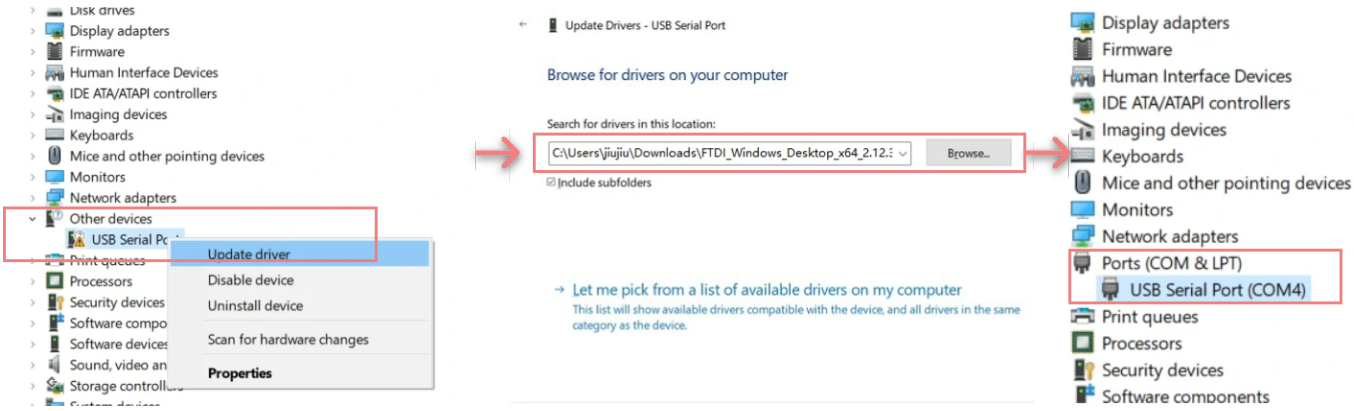

EasyLoader

Easyloader	Download Link	Notes
TimerCamera-F Firmware Easyloader	download	/

Video

- Connect to the Unit TimerCAM hotspot, password 12345678, and open 192.168.4.1 in your browser to view the image. For timed photo capture, refer to the Quick Start Guide.

timercam_f_video.mp4

- Focus Adjustment

timercam_lens_adj.mp4

Product Comparison

To compare information on the TimerCamera series products, you can visit the Product Selection Table, check the target products, and get the comparison results. The selection table covers key information such as core parameters and functional features, and supports comparison of multiple products simultaneously.