Unit Mini PDM

SKU:U089

Description

Unit Mini PDM is a digital MEMS silicon microphone based on PDM (Pulse Density Modulation) signals. It features high signal-to-noise ratio, high sensitivity, low power consumption, strong RF interference immunity, and smooth frequency response. The microphone automatically switches states (power-off / active / sleep) according to the clock frequency, making it suitable for audio data acquisition in wearable devices and smart digital devices.

Features

- PDM signal output (CLK/DAT)
- High sensitivity and high signal-to-noise ratio
- Low power consumption
- Strong RF interference immunity
- LEGO-compatible

Includes

- 1 x Unit Mini PDM
- 1 x HY2.0-4P Grove Cable (5cm)

Applications

- Spectrum analyzer
- Audio recording
- Sound level meter

Specifications

Specification	Parameter
Digital Mic	SPM1423
Sensitivity	94dB SPL@1KHz Typical: -22dBFS
SNR	94dB SPL@1KHz, A-weighted Typical: 61.4dB
THD	100dB SPL@1KHz Typical: 1%
Operating Current	600µA
Enclosure Material	Plastic (PC)
Product Size	24.0 x 24.0 x 13.0mm
Product Weight	4.0g
Package Size	138.0 x 93.0 x 7.0mm
Gross Weight	8.0g

Schematics

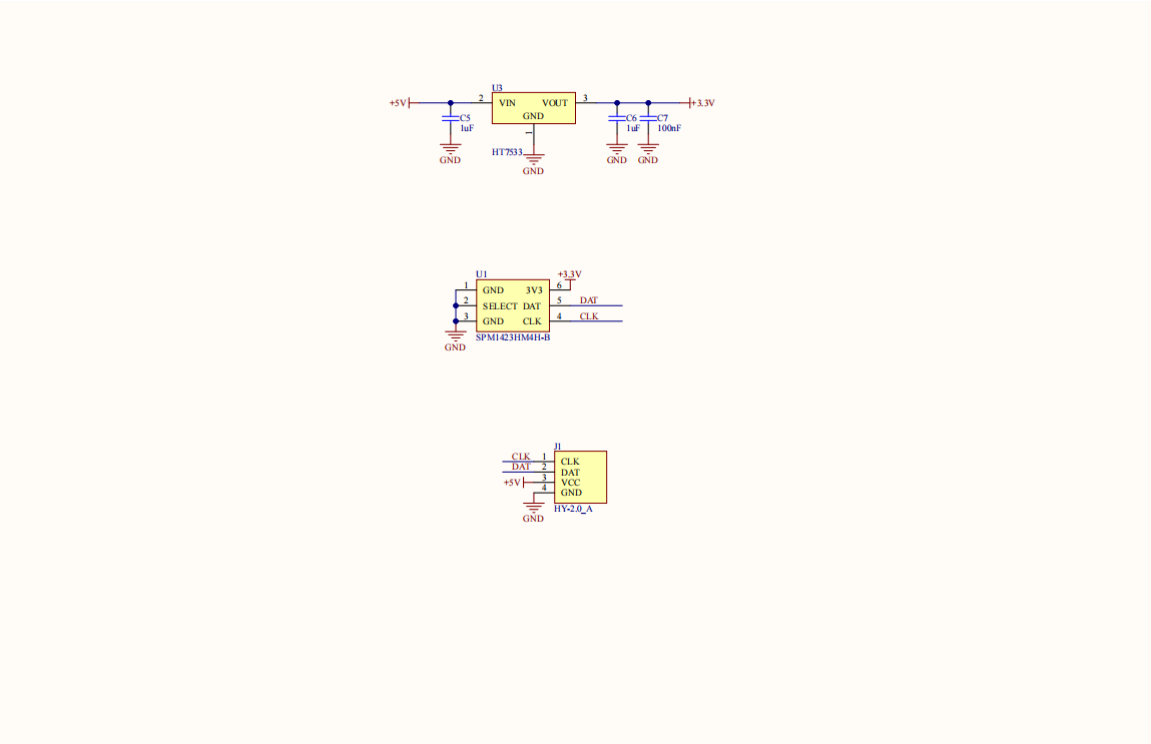

PinMap

Unit Mini PDM

HY2.0-4P	Black	Red	Yellow	White
PORT.B	GND	5V	Data	Clock

Model Size

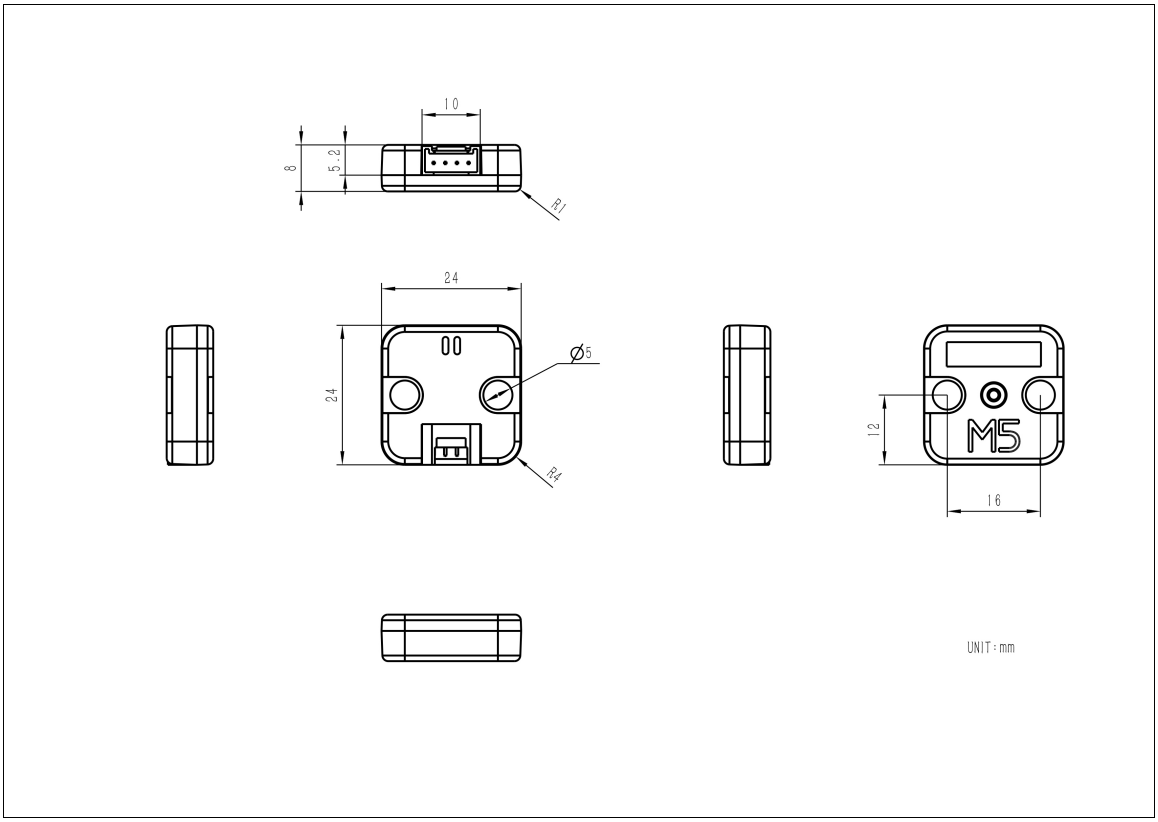

Structure

- Unit Mini PDM Structure Files

Datasheets

- SPM1423

Softwares

Arduino

- Unit Mini PDM Arduino User Guide
- Unit Mini PDM Test Example

UiFlow2

- Unit Mini PDM UiFlow2 Documentation

EasyLoader

Easyloader	Download	Note
Unit PDM Test Easyloader	download	/

Video

PDM.mp4