WIREMOLD®
Outdoor Ground Box

Outdoor Ground Box, part of the Outdoor Power offering from Legrand

Ground Breaking Innovation

As the popularity of outdoor activities grows, so does the demand for connected outdoor spaces that include power, communications and A/V.

The Outdoor Ground Box from Legrand is the first product designed with power and safety in mind. It's the first in-ground product on the market that will deliver permanent power and uses a UL50E Type 6P rated wiring enclosure and has been tested and evaluated by Underwriters Laboratories, Inc. for safe operation year round.

The Outdoor Ground Box is designed to handle the requirements of the outdoor space while blending into the landscape. It's perfect for spaces such as: outdoor retail shopping centers, corporate campuses, amusement parks, sports fields, hospitality, or any outdoor space where power is required.

Features & Benefits

- **Air Pocket Design -** This innovative design traps and maintains an air pocket protecting the devices, plugs and connections from water, snow, and ice. Allows for safer operation year round.
- **Outdoor-Rated Construction –** UV and chemical-resistant F1 rated nonmetallic material, allow the box to hold up for years to come.
- **Three Durable, Premium Finishes –** Outdoor-rated finishes to complement your space design. Choose from black, brown, or gray.
- **Holds up to 5000 lbs -** Has an ANSI/SCTE 77 Tier 5 rating and can hold up to 5,000 lbs of load allowing for the occasional tractor or non-deliberate vehicular traffic.
- **Anti-Float Clips –** Prevents the cover from floating up when flooded. This preserves the air pocket and ensures safe operation.
- **Smart egress door –** Egress door auto adjusts to the size of cable, as well as locking in the closed position when not in use. Prevents cable damage and maintains a safer user experience.
- **Secure –** Includes tamper-resistant lock to prevent unauthorized access.
- **Service feed flexibility –** Each box comes with two (2) locations that will accept up to 1 1/4" trade size nonmetallic conduit, allowing for services to feed the box as well as to daisy chain to other boxes.
- **Modular design -** Boxes are designed to interlock allowing an endless number of boxes in the same location. Provides service separation, everything in one location, and easier installation.
- **Flush to the finished ground -** The buried box can be made flush with any surface, grass, walkways (brick, pavers, concrete, etc). Reduces trip hazards and allows it to blend in with its surroundings.
- **ADA compliant –** Meets all specifications for ADA guidelines.
- **cULus listed to UL50E Type 6P and IP68 requirements while in use -** Tested and listed by Underwriters Laboratories, Inc. to UL2996 and ULC/ORD-C2996:2017 for use in the ground in all weather conditions.

Vertical Markets

- **Commercial**
- **Hospitality**
- **Education**
- **Parks**
- **Entertainment**
- **Healthcare**
- **Retail**
- **Transit**

Compliance

cULus Listed, File Number E486738. Guide QCNL/QCNL7.
Outdoor Ground Boxes (Power Applications) are UL Listed to meet UL50E Type 6P and IP68 requirements.
Outdoor Ground Boxes (Low Voltage Applications) are UL Listed to meet UL50E Type 4X and IP65 requirements.

Installation Considerations

Determine location to install the Ground Box:

- The location must be in a well drained area, away from inlets and outfalls.
- Do not install Box at low points or in areas prone to accumulate standing water.
- Do not install Box in locations where it will be subject to deliberate vehicular traffic.
  - Box is rated for occasional non-deliberate vehicular traffic with a maximum 5,000 lb (22.2 kN) design load (ANSI/SCTE 77 Tier 5).
- Box should only be installed in locations where the grade is within 1% of level.
- Box should be installed in sidewalks only where the grade is less than 2% in all directions.
- Box installation in locations where the seasonally high water table is less than 3 feet (600mm) below finished grade is not recommended.
- Consultation of a licensed professional engineer knowledgeable of local soils is recommended to determine if unsuitable or poor soils may be encountered at the intended Box location.
- Do not install Box on unsuitable soils.
  - Unsuitable soils are those with unsatisfactory drainage characteristics and high volume change potential. Unsuitable soils are defined herein as USCS soil groups OL, OH, and PT (organic silts, organic clays, and peat).
- Installation of Box on poor soils is not recommended without additional drainage improvements. A method for improving drainage and minimizing the potential for heave in frost-susceptible and other poor soils is presented in the product installation instructions.
  - Poor soils are those with poor drainage characteristics.
  - For warm and cold climates, poor soils are defined herein as USCS soil groups ML, MH, CL, and CH (inorganic silts and inorganic clays). Additionally, for cold climates poor soils include USCS soil groups GC and SC (clayey gravels and clayey sands).
  - Poor soils are not a concern for un-irrigated locations where the average annual precipitation is less than 30 inches (762mm).
- Do not install Box in permafrost areas.
- Box should not be installed in locations where bedrock is less than 3 feet (600mm) below finished grade.

Environmental Code Ratings

Type 6P Enclosures constructed for either indoor or outdoor use to provide a degree of protection to personnel against access to hazardous parts to provide a degree of protection against ingress of solid foreign objects (falling dirt); to provide a degree of protection with respect to harmful effects on the equipment due to the ingress of water (rain, sleet, snow, hose directed water, and the entry of water during prolonged submersion at a limited depth); that provides an increased level of protection against corrosion; and that will be undamaged by the external formation of ice on the enclosure.

Type 4X Enclosures constructed for either indoor or outdoor use to provide a degree of protection to personnel against access to hazardous parts; to provide a degree of protection against ingress of solid foreign objects (falling dirt and windblown dust); to provide a degree of protection with respect to harmful effects on the equipment due to the ingress of water (rain, sleet, snow, splashing water, and hose-directed water); that provides an increased level of protection against corrosion; and that will be undamaged by the external formation of ice on the enclosure.

The IP Code is an International Protection Marking per IEC standard 60529.

IP 68 Enclosure is dust tight. No ingress of dust; complete protection against contact. Enclosure is protected in immersion beyond 1 meter. The equipment is suitable for continuous immersion in water under conditions which shall be specified by the manufacturer. Normally, this will mean that the equipment is hermetically sealed. However, with certain types of equipment, it can mean that water can enter but only in such a manner that it produces no harmful effects.

IP 65 Enclosure is dust tight. No ingress of dust; complete protection against contact. Enclosure is protected from water jets. Water projected by a nozzle (6.3mm) against enclosure from any direction shall have no harmful effects.

Glossary of Terms:

USCS Unified Soil Classification System
OL Organic silts and organic silty clays of low plasticity
OH Organic clays of medium to high plasticity, organic silts
PT Peat and other highly organic silts
ML Inorganic silts and very fine sands, rock flour, clayey silts or fine sands with slight plasticity
MH Inorganic silts, micaceous or diatomaceous fine sandy or silty soils, elastic silts
CL Inorganic clays of low to medium plasticity, gravely clays, sandy clays, silty clays, lean clays
CH Inorganic clays of high plasticity, fat clays
GC Clayey gravels, gravel-sand-clay mixtures
SC Clayey sands, sand-clay mixtures

XB814

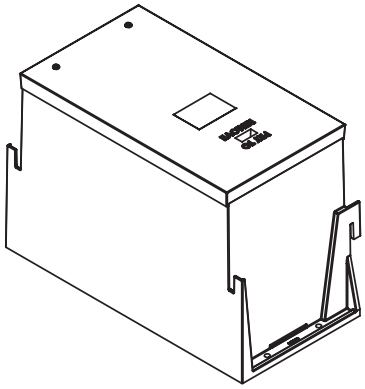

Exterior Ground Box – Single service 2-gang nonmetallic ground box. The box is made from F1 rated nonmetallic material and has been designed to withstand harsh outdoor environments. The box can accept up to (2) 1 1/4" trade size PVC conduit feeds. Boxes are designed to be installed separately or ganged together, for greater capacity and flexibility. Works with XB814 cover assembly (sold separately). These boxes are perfect for grass, sidewalks, patio, or any other location where permanent power is needed.

TOP

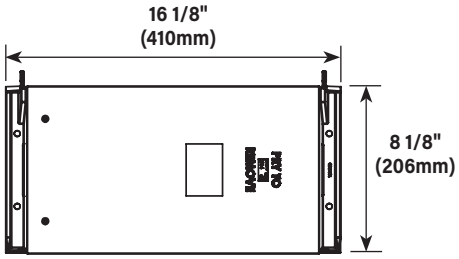

SIDE

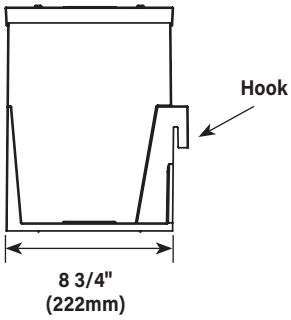

FRONT

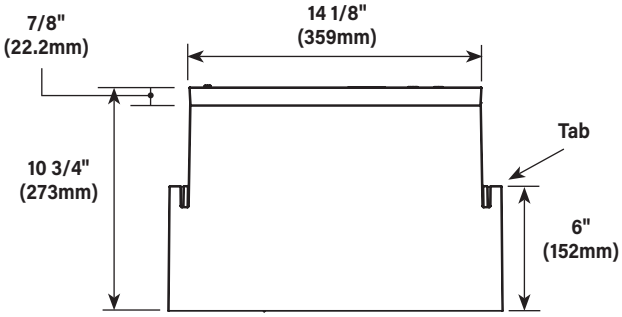

BOTTOM

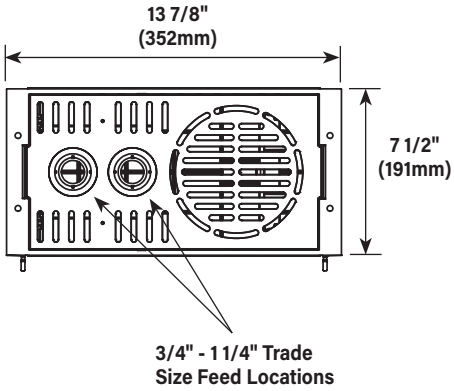

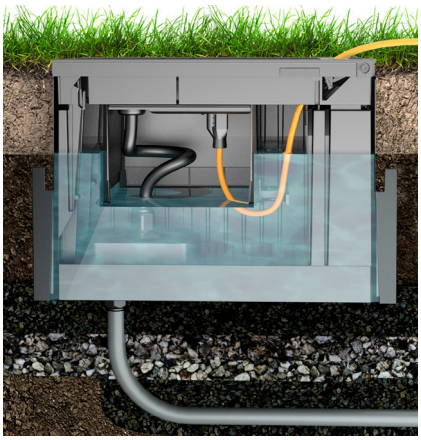

Outdoor Ground Box, exterior view, view installed with bricks, and a cross-sectional view of a Ground Box installation.

XB814C520BN
XB814C520BK
XB814C520GY

Exterior Box Cover Assembly 5-20R – Exterior box cover assembly prewired with (2) 20A weather resistant duplex receptacles. Both duplex receptacles are wired together on a single circuit. Available in brown (XB814C520BN), black (XB814C520BK), or gray (XB814C520GY). When used in conjunction with the ground box body (XB814) the entire unit has a UL50E Type 6P & IP68 rating in outdoor locations.

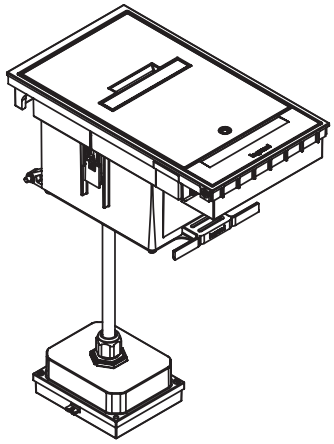

CAUTION: All ground box electrical circuits must be protected by a Ground Fault Circuit Interrupter upstream from the ground box.

NOTE: Cover must be closed while in use. Use only molded plug and cord assemblies that are rated for outdoor use.

NOTE: Maximum length of plug allowed at end of cord is 3" (76mm).

TOP

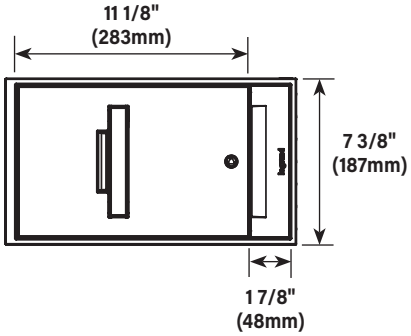

INSIDE VIEW

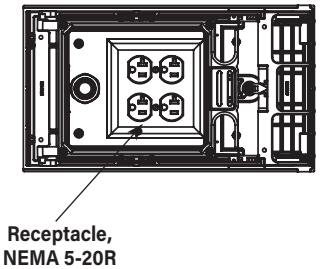

Components Included:

- Cover Flange
- Cover Body
- Textured Surface Plate
- Egress Door
- Handle
- SOOW Cord
- NEMA 6P Rated Wiring Enclosure
- 2 20A Duplex Weather Resistant Receptacles
- Tamper-Resistant Key & Lock

NOTE: Lock Nut Tool (XBLNT) sold separately.

FRONT

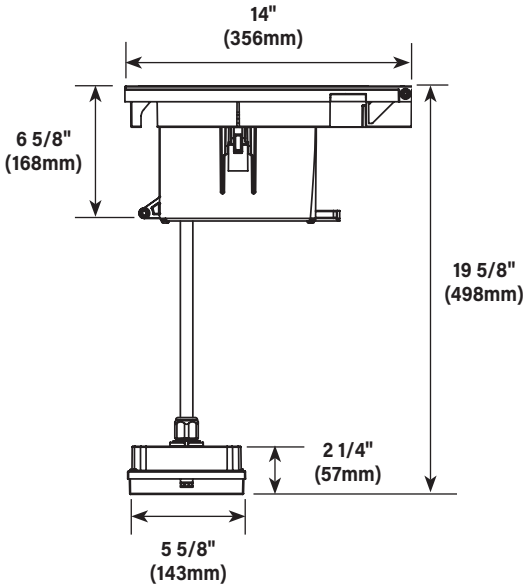

BACK

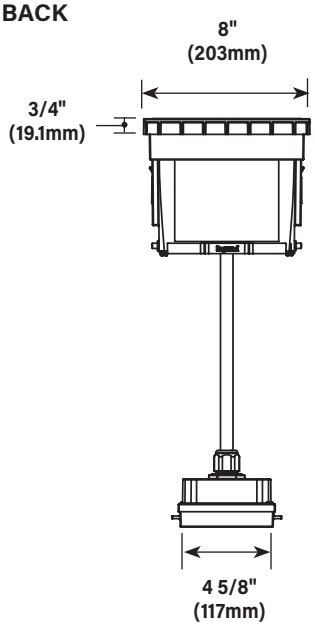

XB814CLVBN
XB814CLVBK
XB814CLVGY

Exterior Box Cover Assembly Low Voltage – Exterior box low voltage cover assembly, designed to accept up to 12 communication ports or 8 Legrand AVIP devices. Available in brown (XB814CLVBN), black (XB814CLVBK), or gray (XB814CLVGY). When used in conjunction with the ground box body (XB814) the entire unit has a UL50E Type 4X & IP65 rating in outdoor locations.

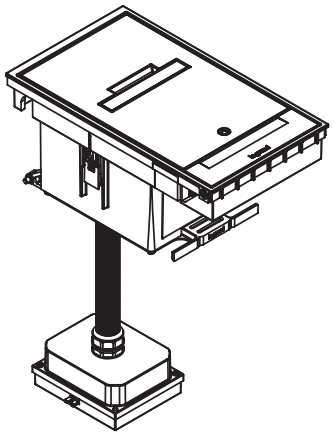

NOTE: Cover must be closed while in use. Use only cables that are rated for outdoor use.

NOTE: Maximum length of connector allowed at end of cable is 2" (51mm).

Components Included:

- **Cover Flange**
- **Cover Body**
- **Textured Surface Plate**
- **Egress Door**
- **Handle**
- **1" Trade Size Cable Chase**
- **NEMA 4X Rated Wiring Enclosure**
- **8-Port AVIP Device Mounting Plate**
- **12-Port Communications Device Plate**
- **Tamper-Resistant Key & Lock**

NOTE: Lock Nut Tool (XBLNT) sold separately.

TOP

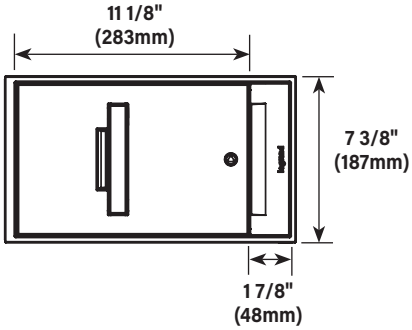

INSIDE VIEWS

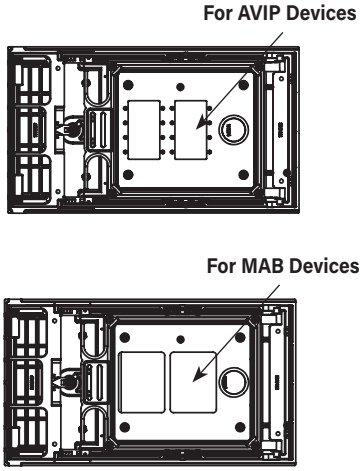

SIDE

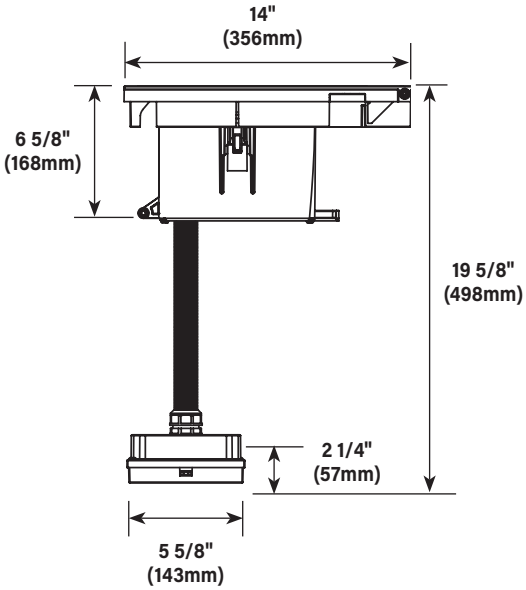

FRONT

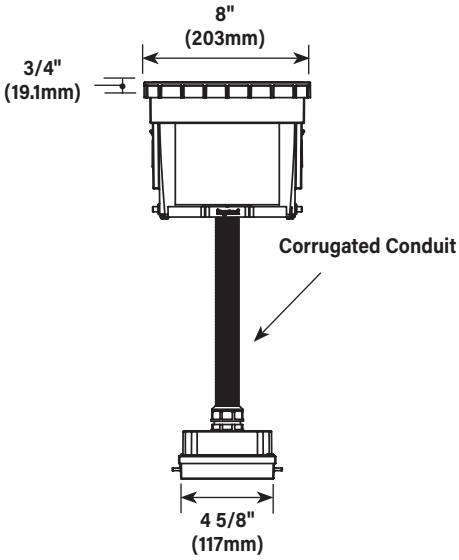

Made-To-Order Cover Assembly Options

These cover assemblies are made-to-order with a 10-day lead time. Please refer to the listings below to select the correct configuration to meet your receptacle requirements.

Part Number	Description	NEMA Configuration	Colors Available	
XB814CL515BK **XB814CL515BN** **XB814CL515GY**	Exterior Box Cover Assembly with a Single NEMA L5-15R Locking Receptacle	L5-15R	Black, Brown, Gray	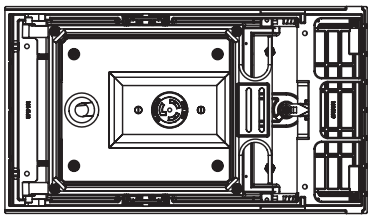
XB814CL615BK **XB814CL615BN** **XB814CL615GY**	Exterior Box Cover Assembly with a Single NEMA L6-15R Locking Receptacle	L6-15R	Black, Brown, Gray	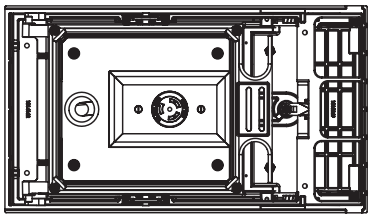
XB814CL715BK **XB814CL715BN** **XB814CL715GY**	Exterior Box Cover Assembly with a Single NEMA L7-15R Locking Receptacle	L7-15R	Black, Brown, Gray	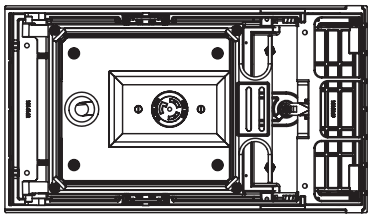

CAUTION: All ground box electrical circuits must be protected by a Ground Fault Circuit Interrupter upstream from the ground box.

NOTE: Cover must be closed while in use. Use only molded plug and cord assemblies that are rated for outdoor use.

NOTE: Maximum length of plug allowed at end of cord is 3" (76mm).

Made-To-Order Cover Assembly Options

These cover assemblies are made-to-order with a 10-day lead time. Please refer to the listings below to select the correct configuration to meet your receptacle requirements.

Part Number	Description	NEMA Configuration	Colors Available
XB814C520C2BK **XB814C520C2BN** **XB814C520C2GY**	Exterior Box Cover Assembly with 2 NEMA 5-20R Duplex Receptacles on 2 Circuits	5-20R	Black, Brown, Gray

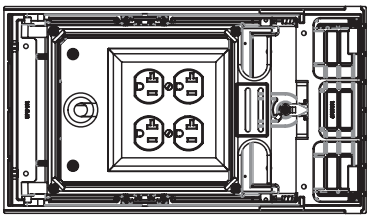

NOTE: This is a two circuit box that requires a double pole circuit breaker and has a shared neutral.

XB814CL520BK **XB814CL520BN** **XB814CL520GY**	Exterior Box Cover Assembly with a Single NEMA L5-20R Locking Receptacle	L5-20R	Black, Brown, Gray

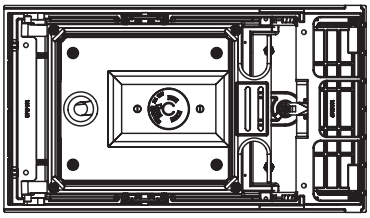

XB814C620BK **XB814C620BN** **XB814C620GY**	Exterior Box Cover Assembly with 2 NEMA 6-20R Duplex Receptacles	6-20R	Black, Brown, Gray

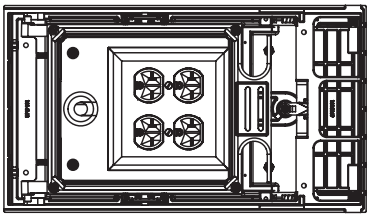

XB814CL620BK **XB814CL620BN** **XB814CL620GY**	Exterior Box Cover Assembly with a Single NEMA L6-20R Locking Receptacle	L6-20R	Black, Brown, Gray

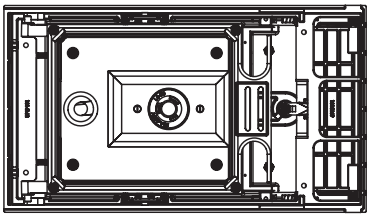

CAUTION: All ground box electrical circuits must be protected by a Ground Fault Circuit Interrupter upstream from the ground box.

NOTE: Cover must be closed while in use. Use only molded plug and cord assemblies that are rated for outdoor use.

NOTE: Maximum length of plug allowed at end of cord is 3" (76mm).

Made-To-Order Cover Assembly Options

These cover assemblies are made-to-order with a 10-day lead time. Please refer to the listings below to select the correct configuration to meet your receptacle requirements.

Part Number	Description	NEMA Configuration	Colors Available	
XB814CL720BK **XB814CL720BN** **XB814CL720GY**	Exterior Box Cover Assembly with a Single NEMA L7-20R Locking Receptacle	L7-20R	Black, Brown, Gray	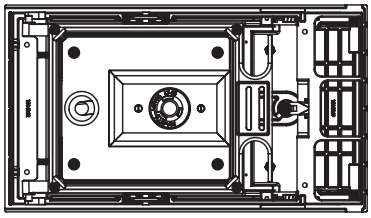
XB814CL1420BK **XB814CL1420BN** **XB814CL1420GY**	Exterior Box Cover Assembly with a Single NEMA L14-20R Locking Receptacle	L14-20R	Black, Brown, Gray	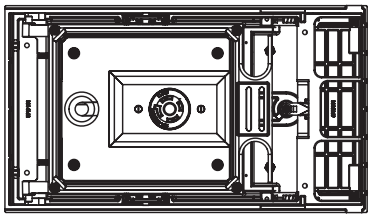
XB814CL1520BK **XB814CL1520BN** **XB814CL1520GY**	Exterior Box Cover Assembly with a Single NEMA L15-20R Locking Receptacle	L15-20R	Black, Brown, Gray	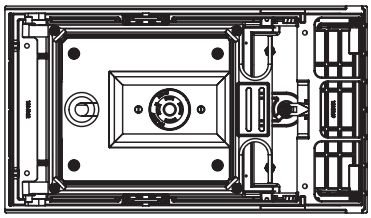
XB814CL1620BK **XB814CL1620BN** **XB814CL1620GY**	Exterior Box Cover Assembly with a Single NEMA L16-20R Locking Receptacle	L16-20R	Black, Brown, Gray	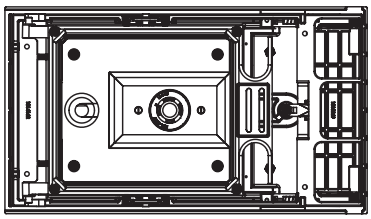

CAUTION: All ground box electrical circuits must be protected by a Ground Fault Circuit Interrupter upstream from the ground box.

NOTE: Cover must be closed while in use. Use only molded plug and cord assemblies that are rated for outdoor use.

NOTE: Maximum length of plug allowed at end of cord is 3" (76mm).

Made-To-Order Cover Assembly Options

These cover assemblies are made-to-order with a 10-day lead time. Please refer to the listings below to select the correct configuration to meet your receptacle requirements.

Part Number	Description	NEMA Configuration	Colors Available	
XB814CL530BK **XB814CL530BN** **XB814CL530GY**	Exterior Box Cover Assembly with a Single NEMA L5-30R Locking Receptacle	L5-30R	Black, Brown, Gray	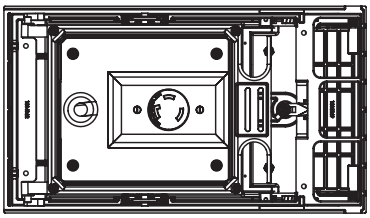
XB814CL630BK **XB814CL630BN** **XB814CL630GY**	Exterior Box Cover Assembly with a Single NEMA L6-30R Locking Receptacle	L6-30R	Black, Brown, Gray	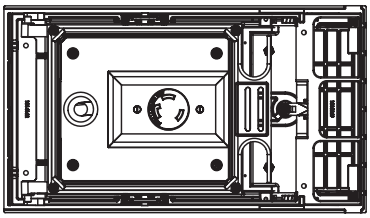
XB814CL1430BK **XB814CL1430BN** **XB814CL1430GY**	Exterior Box Cover Assembly with a Single NEMA L14-30R Locking Receptacle	L14-30R	Black, Brown, Gray	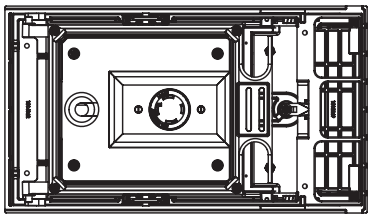
XB814CL1530BK **XB814CL1530BN** **XB814CL1530GY**	Exterior Box Cover Assembly with a Single NEMA L15-30R Locking Receptacle	L15-30R	Black, Brown, Gray	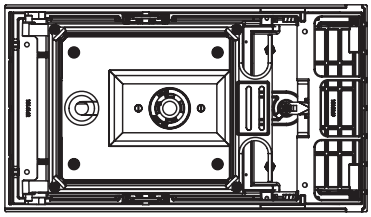
XB814CL1630BK **XB814CL1630BN** **XB814CL1630GY**	Exterior Box Cover Assembly with a Single NEMA L16-30R Locking Receptacle	L16-30R	Black, Brown, Gray	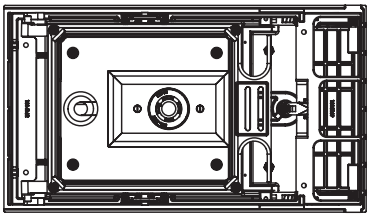

CAUTION: All ground box electrical circuits must be protected by a Ground Fault Circuit Interrupter upstream from the ground box.

NOTE: Cover must be closed while in use. Use only molded plug and cord assemblies that are rated for outdoor use.

NOTE: Maximum length of plug allowed at end of cord is 3" (76mm).

Outdoor Ground Box Accessories Ordering Information

XB814CPBN
XB814CPBK
XB814CPGY

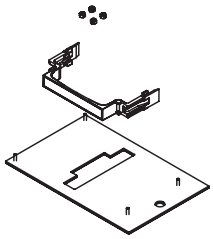

Exterior Box Cover Plate Kit – Replacement cover plate. Comes complete with a new handle and all of the mounting hardware required. Available in brown (XB814CPBN), black (XB814CPBK), or gray (XB814CPGY).

XB814ED

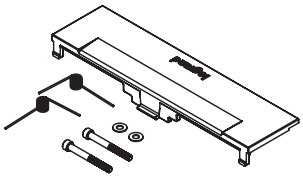

Replacement Egress Door Kit – Replacement door can be changed out if the door ever wears out or becomes damaged.

CRFB-KEY

Key Set – Replacement Key Set for Outdoor Ground Box.

XB814SP

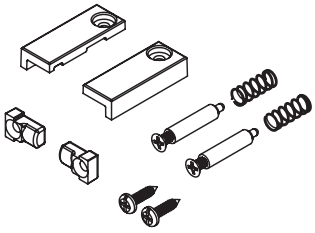

Replacement Egress Door Spring Pin Set – Locks the egress door in the closed position when cover is closed.

XBLNT

Exterior Box Locknut Tool – Exterior Box locknut wrench. Used to tighten the locknut on the junction box. Sold Separately.

NOTE: All brand and product names referenced in this document are registered trademarks or trademarks of their respective holders.

Legrand, North America
60 Woodlawn Street
West Hartford, CT 06110
877-295-3472
www.legrand.us

Canada
844-977-3783
www.legrand.ca

FOLLOW US

©2025 Legrand All Rights Reserved