Wiremold
881 Cvr W/ 4 15A Rec BK
Part No. 899CTCBK

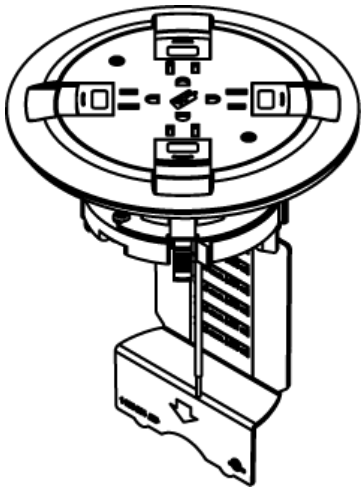

Wiremold Registered Ratchet-Pro Trademark Series Floor Boxes provide single- and dual-service capability in a variety of easy-to-install round floor boxes. These designs allow the flexibility for providing power, A/V or communication services to open-space areas in an aesthetic solution. Applications include malls, shopping centers, department stores, airports, hospitals, and office buildings. Ratchet-Pro Trademark Series Floor Boxes are cULus Listed for use in both on grade and above grade concrete construction.

Features & Benefits

Cover with four 15A receptacles for Ratchet-Pro™ Series Floor Boxes.

Specifications

General Info

Product Family / Series / Group	Ratchet-Pro Series	Product Line	Wiremold
UPC Number	786564014928	Country Of Origin	Mexico
Product Type	Floor Box Cover, Receptacle	Construction	Not Assembled
Application Sector	Commercial	Standard	cULus Listed Nonmetallic Outlet Boxes: File E110748 Guide QCMZ. Meets Article 314.27(C) of NEC.
Warranty Type	1-Year from Installation or 2-Years from Day of Sale		

Dimensions

Product Weight US	1.49 lb		

Listing Agencies / 3rd Party Agencies

cULus ListingNumber	E110748	cULus Listed	Yes

Additional Information

RoHS Compliant	Yes

Technical Information

Cable Entry	Through Floor	Number of Outlets	4