GENERAL TOLERANCE											
	10 MAX	50 MAX	100 MAX	250 MAX	250 OVR	R5 MAX	R10 MAX	R20 MAX	R20 OVR	ANGLE	ECCENT
A	±0.15	±0.2	±0.3	±0.5	±0.75					±3°	0.1
B	±0.2	±0.3	±0.55	±0.95	±1.4	±0.2	±0.3	±0.5	±2.5	±3°	0.1
C	±0.3	±0.5	±0.8	±1.4	±2					±3°	0.15

NO.	PART NO.	PART NAME	QTY.	MATERIAL	COLOR
①	7157-8054	COVER	1	PES	–
②	7122-3623-80	HOUSING	1	PA6T-G	REDDISH BROWN
③	7227-6057	FUSE ELEMENT FOR 140A	1	COPPER ALLOY	–

注記

1. 使用ボルト：M6
2. 定格電圧：32VDC

NOTES

1. APPLICABLE BOLT:M6
2. RATED VOLTAGE:32VDC

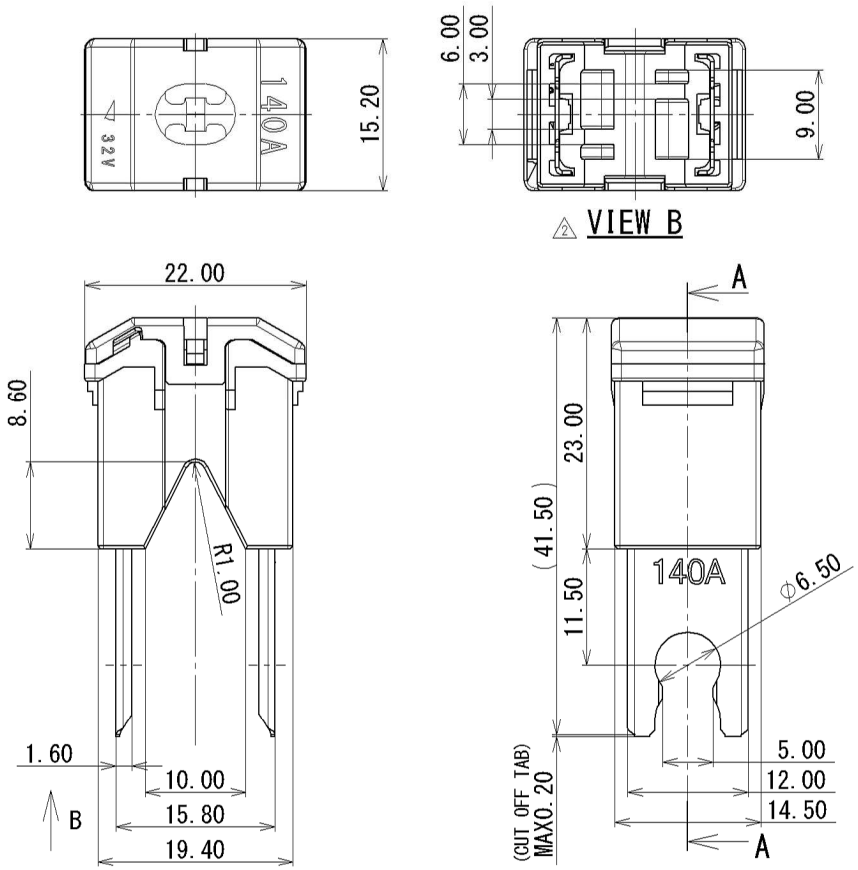

ISSUE MARK

LET	DATE	REVISION RECORD	NO.	CHKD
2	10.09.27	ADDED NOTES ETC	C10-Y129	H.T
1	93.12.14	DELETED DIMENSION	C93-M264	T.S
	93.07.14	NEW	C93-6851	T.S

GENERAL TOLERANCE							
	10MAX	50MAX	100MAX	250MAX	250OVR	ANGLE	ECCENT
A	±0.15	±0.2	±0.3	±0.5	±0.75	±30'	0.1
B	±0.2	±0.3	±0.55	±0.95	±1.4	±30'	0.1
C	±0.3	±0.5	±0.8	±1.4	±2	±30'	0.15

SPECIFIED

MASS

CUSTOMER

CUSTOMER PART NO. | CUSTOMER DWG NO.

OFFICE | TRIAL PART NO.

VENDOR

VENDOR NO.

DWG TYPE	DWG SOURCE	DWG DATE	UNIT	SCL	ANGLE
R	NEW	93.07.14	mm	2:1	3

APPROVED	CHECKED	CHECKED	DESIGN	DRAWN
N. MATSUMURA	M. TOTSUKA	———	T. KUDOH	H. TSUKIJI
10.09.27	10.09.27	———	93.07.14	10.09.27

MATL. SPEC. SEE TABLE

TREAT. & FIN.

NAME HIGH CURRENT FUSE LINKS

（大電流ヒューズ）B_1-TYPE 140A

PART NO. / CH. CODE 7327-6057

DWG NO. 7327-6057:R

SET DWG NO.

YAZAKI CORPORATION