TABLE 1	SUB-ASSEMBLY PART NUMBER	NO.	PART NUMBER	PART NAME	MATERIAL	COLOR	QUANTITY
	SEE TABLE 2	1	SEE TABLE 2	30P (24Px1.2mm + 4Px2.8mm + 2Px6.3mm) UNSEALED FEMALE CONNECTOR HOUSING	PBT-GF15	SEE TABLE 2	1
		2	7172-0953	30P (24Px1.2mm + 4Px2.8mm + 2Px6.3mm) UNSEALED FEMALE CONNECTOR ISL	PBT-GF15	NATURAL	1

TABLE 2	SUB-ASSEMBLY PART NUMBER	HOUSING PART NUMBER	KEYWAY	COLOR	YAZAKI INLINE MATING PART NUMBER
	7298-4329-30	7189-3185-30	A	BLACK	7297-4331-30
	7298-4329-70	7189-3185-70	A	YELLOW	7297-4331-70
	7298-4330-40	7189-3186-40	B	LIGHT GRAY	7297-4332-40

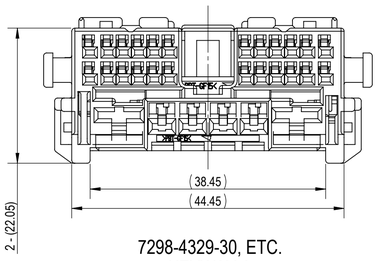

7298-4329-30, ETC.
KEYWAY A

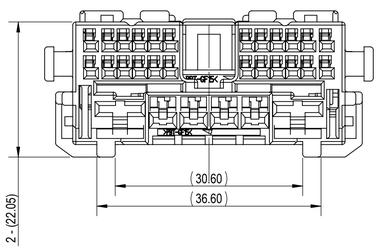

7298-4330-40
KEYWAY B

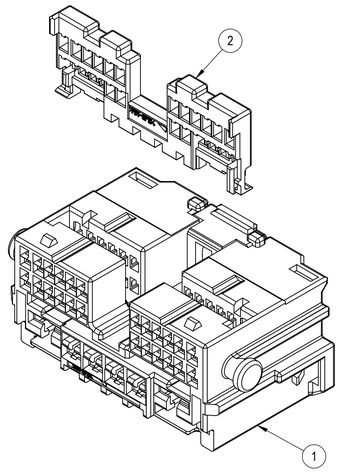

EXPLODED VIEW
(2/1)

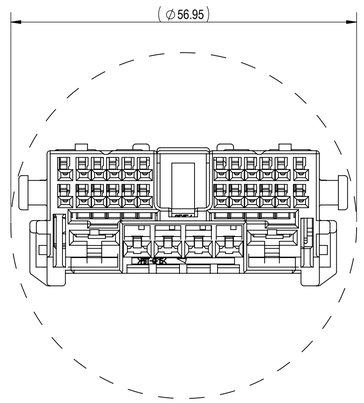

RECOMMENDED PASS-THROUGH
HOLE DIMENSION
(1mm CLEARANCE ALL AROUND)
(2/1)

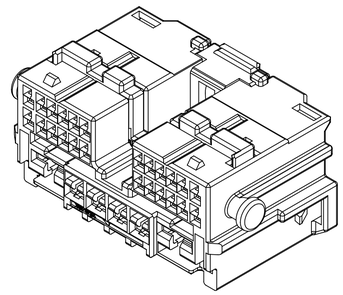

FRONT ISOMETRIC VIEW
(2/1)

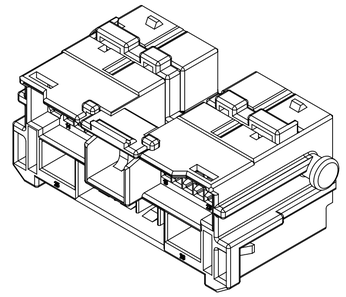

REAR ISOMETRIC VIEW
(2/1)

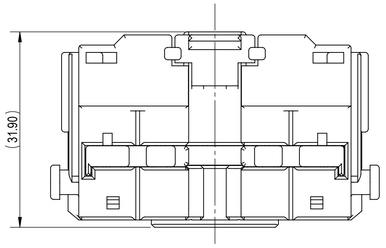

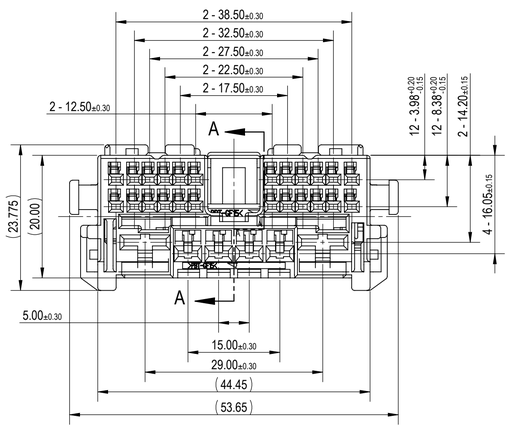

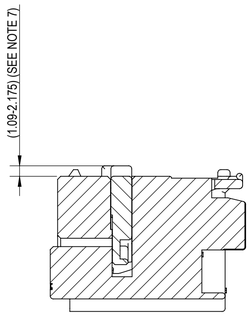

SECTION A-A

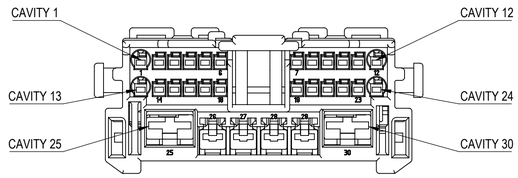

NOTES:
1. PARTS MUST BE PURCHASED FROM YAZAKI.
2. PARTS MUST BE FREE FROM FLASH AND IMPERFECTIONS THAT AFFECT FUNCTION.
3. APPLICABLE TERMINAL: SEE: 7196-1367-02:R DRAWING (1.2mm YCO UNSEALED)
   OR 13543112 DRAWING (APTIV 1.2mm OCS UNSEALED)
   △1 OR C-1534326 DRAWING (TYCO 1.2mm MCON CB UNSEALED)
   MAX WIRE OD: 2.40mm (CAVITIES 1, 12, 13, 24)
   MAX WIRE OD: 1.90mm (CAVITIES 2-11, 14-23)
   SEE: 7116-4270-02:R DRAWING (2.8mm YESC KAIZEN UNSEALED)
   MAX WIRE OD: 3.00mm (CAVITIES 26-29)
   SEE: 7116-4120-02:R DRAWING (6.3mm YESC UNSEALED)
   MAX WIRE OD: 4.20mm (CAVITIES 25, 30)
4. MATING PART NUMBER: SEE TABLE 2
5. PART SATISFIES PF.90012, REV. B, APRIL 2017 AND GMW3191, MARCH 2019 (T2/V1/S1/MF2)
6. PART TO COMPLY WITH YPES-31-038 REQUIREMENTS.
7. THIS DIMENSION SHOWS THE PRE-SET POSITION OF THE ISL.
8. THIS DRAWING IS TO BE USED FOR INTERNAL YAZAKI PSW SUBMISSION.
9. HANDLING MANUAL NUMBER: YPES-15-1525E
10. CONNECTOR IS CAPABLE OF ACCEPTING A DRESS COVER.

△1	09-17-2020	REVISED APPLICABLE TERMINALS	C20-A675	A.P.
-	11-27-2019	NEW	C19-AA26	S.A.
LET	DATE	REVISION RECORD	NO.	CHKD

GENERAL TOLERANCE

	10MAX	50MAX	100MAX	250MAX	250OVR	R5 MAX	R10 MAX	R20 MAX	R20 OVR	ANGLE	ECCENT
A	±0.15	±0.2	±0.3	±0.5	±0.75	±0.2	±0.3	±0.5	±2.5	±3°	0.1
B	±0.2	±0.3	±0.55	±0.95	±1.4					±3°	0.1
Ⓒ	±0.3	±0.5	±0.8	±1.4	±2					±3°	0.15
SPECIFIED										MASS	(17.09)g

CUSTOMER				MATL. SPEC.	SEE TABLE 1
CUSTOMER PART NO.		CUSTOMER DWG NO.		TREAT. & FIN.	N/A
OFFICE	YNA	TRIAL PART NO.		NAME	30P (24Px1.2mm + 4Px2.8mm + 2Px6.3mm) UNSEALED FEMALE CONNECTOR SUB-ASSEMBLY
VENDOR					
VENDOR NO.					

DWG TYPE	DWG SOURCE	DWG DATE	UNIT	SCL	ANGLE
R	7298-4329-30:M △1	11-27-2019	mm	2/1	3

APPROVED	CHECKED	CHECKED	DESIGN	DRAWN
Jeremy Gagnon (Digitally signed by Jeremy Gagnon Date: 2020-10-06 10:17:25 -04'00')		Isabel Muñiz	DALE SIEVERT 05-03-2019	ADILENE PEREZ 10-05-2020

PART NO. CH. CODE: 7298-4329-30, ETC.
DWG NO.: 7298-4329-30:R
YAZAKI CORPORATION

ISSUE MARK