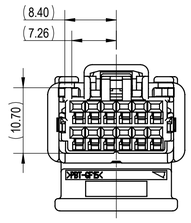


(2/1)

7298-2971-30, ETC.
KEYWAY A

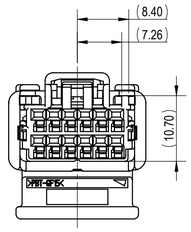


(2/1)

7298-4700-40, ETC.
KEYWAY B

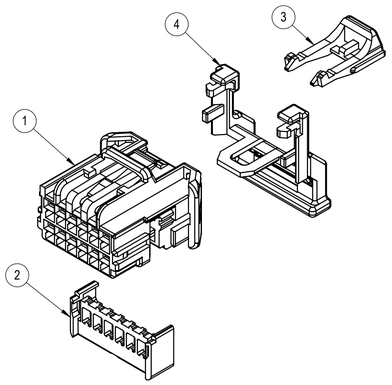


EXPLODED VIEW
(2/1)

| TABLE 1 | SUB-ASSEMBLY PART NUMBER | NO. | PART NUMBER | PART NAME | MATERIAL | COLOR | QUANTITY |
|---|---|---|---|---|---|---|---|
| | SEE TABLE 2 | 1 | SEEE TABLE 2 | 12P 1.2mm UNSEALED FEMALE CONNECTOR HOUSING | PBT-GF15 | SEE TABLE 2 | 1 |
| | | 2 | 7172-1699 | 12P 1.2mm UNSEALED FEMALE CONNECTOR ISL | PBT-GF15 | NATURAL | 1 |
| | | 3 | 7172-1336-50 | SMALL 1.2 UNSEALED FEMALE CONNECTOR CPA | PBT-GF15 | RED | 1 |
| | | 4 | 7172-1697-30 | 12P 1.2mm UNSEALED ROUTING COVER | PBT-GF15 | BLACK | 1 |
| | SEE TABLE 2 | 1 | SEE TABLE 2 | 12P 1.2mm UNSEALED FEMALE CONNECTOR HOUSING | PBT-GF15 | SEE TABLE 2 | 1 |
| | | 2 | 7172-1699 | 12P 1.2mm UNSEALED FEMALE CONNECTOR ISL | PBT-GF15 | NATURAL | 1 |
| | | 3 | 7172-1336-50 | SMALL 1.2 UNSEALED FEMALE CONNECTOR CPA | PBT-GF15 | RED | 1 |

| TABLE 2 | SUB-ASSEMBLY PART NUMBER | HOUSING PART NUMBER | KEYWAY | ROUTING COVER | COLOR | MASS (g) | YAZAKI INLINE MATING PART NUMBER |
|---|---|---|---|---|---|---|---|
| | 7298-2971-30 | 7198-2971-30 | A | Y | BLACK | (4.18) | 7297-2973-30 |
| | 7298-2972-30 | 7198-2971-30 | A | N | BLACK | (3.37) | 7297-2974-30 |
| | 7298-4700-40 | 7198-4700-40 | B | Y | LIGHT GRAY | (4.18) | 7297-4702-40 |
| | 7298-4703-40 | 7198-4700-40 | B | N | LIGHT GRAY | (3.37) | 7297-4701-40 |

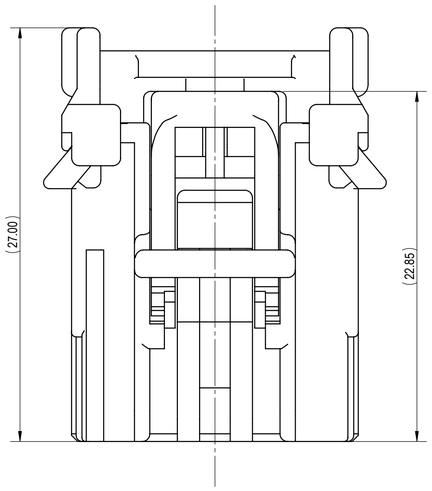


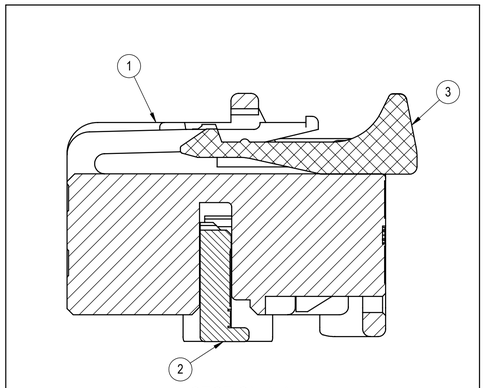


SECTION A-A
WITHOUT ROUTING COVER

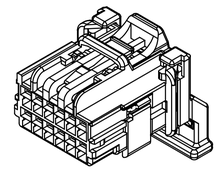

FRONT ISOMETRIC VIEW
(2/1)

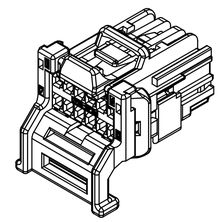

REAR ISOMETRIC VIEW
(2/1)

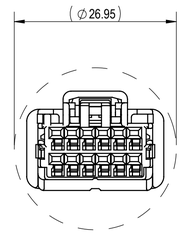


RECOMMENDED PASS-THROUGH
HOLE DIMENSION
(1mm CLEARANCE ALL AROUND)
(2/1)

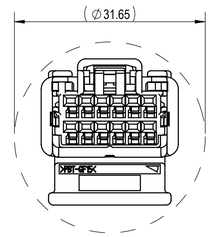


RECOMMENDED PASS-THROUGH
HOLE DIMENSION WITH 7172-1697-30
(1mm CLEARANCE ALL AROUND)
(2/1)

NOTES:

1. PARTS MUST BE PURCHASED FROM YAZAKI.
2. PARTS MUST BE FREE OF FLASH AND IMPERFECTIONS THAT AFFECT FUNCTION.
3. APPLICABLE TERMINAL: SEE 7196-1367-02:R DRAWING (1.2mm YCO UNSEALED) OR SEE 13543112 DRAWING (APTIV 1.2mm OCS UNSEALED) MAX WIRE OD: 1.90mm
4. MATING PART NUMBER: SEE TABLE 2
5. PART SATISFIES GM3191, JUNE 2012 (T2/V1/S1/MF2)
6. PART TO COMPLY WITH YPES-31-038 REQUIREMENTS.
7. THIS DIMENSION SHOWS THE PRE-SET POSITION OF THE ISL.
8. THIS DIMENSION SHOWS THE PRE-SET POSITION OF THE CPA.
9. THIS DRAWING IS TO BE USED FOR INTERNAL YAZAKI PSW SUBMISSION.
10. HANDLING MANUAL NUMBER: YPES-15-1673E

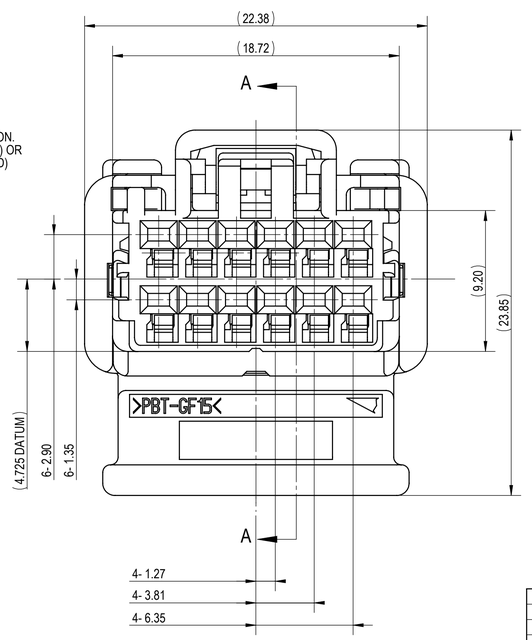


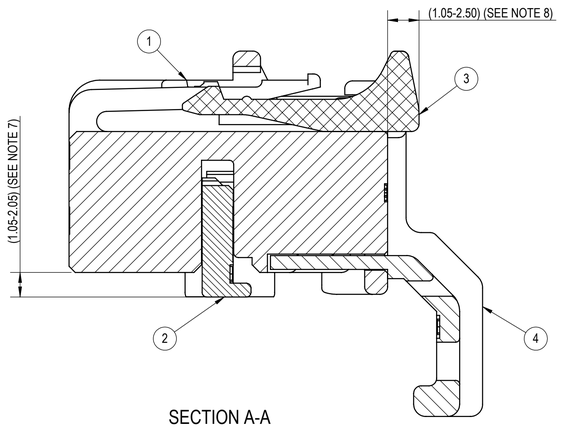


SECTION A-A

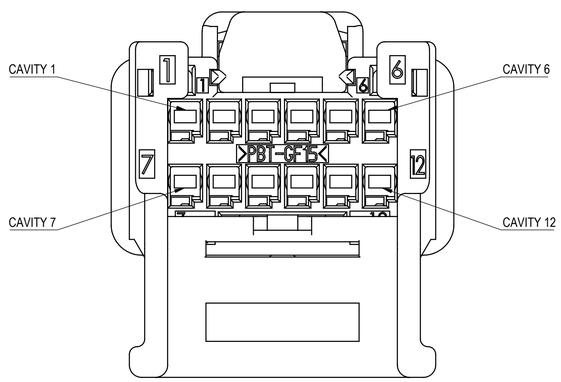


| LET | DATE | REVISION RECORD | NO. | CHKD |
|---|---|---|---|---|
| - | 08-12-2020 | NEW | C20-A585 | M.S. |

| GENERAL TOLERANCE | | | | | | | | | | | |
|---|---|---|---|---|---|---|---|---|---|---|---|
| | 10MAX | 50MAX | 100MAX | 250MAX | 250OVR | R5 MAX | R10 MAX | R20 MAX | R20 OVR | ANGLE | ECCENT |
| A | ±0.15 | ±0.20 | ±0.30 | ±0.50 | ±0.75 | | | | | ±3° | 0.1 |
| B | ±0.20 | ±0.30 | ±0.55 | ±0.95 | ±1.40 | ±0.20 | ±0.30 | ±0.50 | ±2.50 | ±3° | 0.1 |
| Ⓒ | ±0.30 | ±0.50 | ±0.80 | ±1.40 | ±2.00 | | | | | ±3° | 0.15 |
| SPECIFIED | | | | | | | | | | MASS SEE TABLE 2 | |

| | | | | | |
|---|---|---|---|---|---|
| CUSTOMER | | | | | |
| CUSTOMER PART NO. | | CUSTOMER DWG NO. | | | |
| OFFICE | YNA | TRIAL PART NO. | | | |
| VENDOR | | | | | |
| VENDOR NO. | | | | | |
| DWG TYPE | DWG SOURCE | DWG DATE | UNIT | SCL | ANGLE |
| R | 7298-2971-30:M ⚠1 | 08-12-2020 | mm | 5/1 | 3 |
| APPROVED | CHECKED | CHECKED | DESIGN | DRAWN | |
| | | | CHAD PARDO 04-19-2018 | MICHELLE SANTILLAN 03-19-2021 | |

| | | | |
|---|---|---|---|
| MATL. SPEC. | SEE TABLE | TREAT. & FIN. | N/A |
| NAME | 12P 1.2mm UNSEALED FEMALE CONNECTOR SUB-ASSEMBLY | | |
| PART NO. CH. CODE | 7298-2971-30, ETC. | | |
| DWG NO. | 7298-2971-30:R | | |
| | YAZAKI CORPORATION | | |

ISSUE MARK