TABLE 1	SUB-ASSEMBLY PART NUMBER	NO.	PART NUMBER	PART NAME	MATERIAL	COLOR	QUANTITY
	SEE TABLE 2	1	SEE TABLE 2	8P 1.2mm UNSEALED FEMALE CONNECTOR HOUSING	PBT-GF15	SEE TABLE 2	1
		2	7172-1362	8P 1.2mm UNSEALED CONNECTOR ISL	PBT-GF15	NATURAL	1
		3	7172-1336	SMALL 1.2mm SYSTEM UNSEALED CONNECTOR CPA	PBT-GF15	NATURAL	1

TABLE 2

SUB-ASSEMBLY PART NUMBER	HOUSING PART NUMBER	KEYWAY	CPA	COLOR	MASS (g) △2	YAZAKI INLINE MATING PART NUMBER
7289-7406-30	7189-7406-30	A	Y	BLACK	(3.22)	7288-7408-30
7289-7407-40	7189-7407-40	B	Y	LIGHT GRAY	(3.22)	7288-7409-40
7298-1031-30	7189-7406-30	A	N	BLACK	(2.96)	7288-7408-30
7298-1032-40	7189-7407-40	B	N	LIGHT GRAY	(2.96)	7288-7409-40

(2/1)

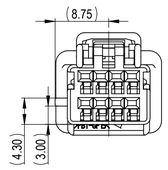

7289-7406-30, ETC.
KEYWAY A

(2/1)

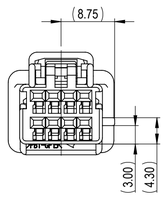

7289-7407-40, ETC
KEYWAY B

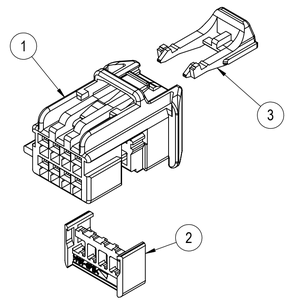

EXPLODED VIEW
(2/1)

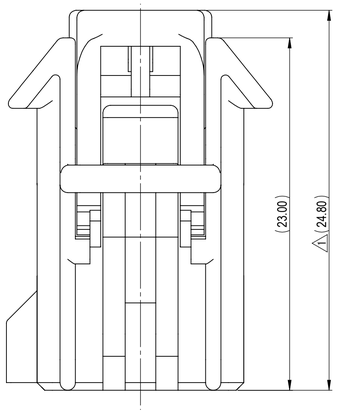

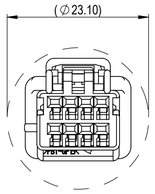

RECOMMENDED PASS-THROUGH
HOLE DIMENSION
(1mm CLEARANCE ALL AROUND)
(2/1)

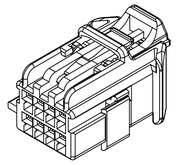

FRONT ISOMETRIC VIEW
(2/1)

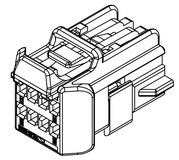

REAR ISOMETRIC VIEW
(2/1)

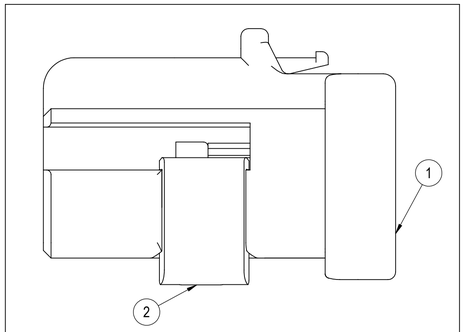

WITHOUT CPA

NOTES:

1. PARTS MUST BE PURCHASED FROM YAZAKI.
2. PARTS MUST BE FREE OF FLASH AND IMPERFECTIONS THAT AFFECT FUNCTION.
3. △2 APPLICABLE TERMINAL: SEE 7196-1367-02:R DRAWING (1.2mm YAZAKI YCO UNSEALED)
   SEE 13543112 DRAWING (1.2mm APTIV OCS UNSEALED)
   MAX WIRE OD: 1.90mm
4. MATING PART NUMBER: SEE TABLE 2
5. PART SATISFIES PF.90012, CHANGE LEVEL A, (T2/V1/S1/MF2) WITH THE FOLLOWING EXCEPTIONS:
   SECTION 6.4.2 I = ISL PRE-SET TO FULL INSTALL WITH IMPROPERLY INSTALLED TERMINALS: (53N) MIN.
   SECTION 6.4.2 I = ISL FULL INSTALL TO PRE-SET: (17.2N) MIN - (45N) MAX
   SECTION 6.4.2 J = CPA FULL INSTALL TO PRE-SET: (15N) MIN - (31N) MAX
6. PART TO COMPLY WITH YPES-31-038 REQUIREMENTS.
7. THIS DIMENSION SHOWS THE PRE-SET POSITION OF THE CPA
8. THIS DIMENSION SHOWS THE PRE-SET POSITION OF THE ISL.
9. THIS DRAWING IS TO BE USED FOR INTERNAL YAZAKI PSW SUBMISSION.
10. HANDLING MANUAL NUMBER: YPES-15-1673E

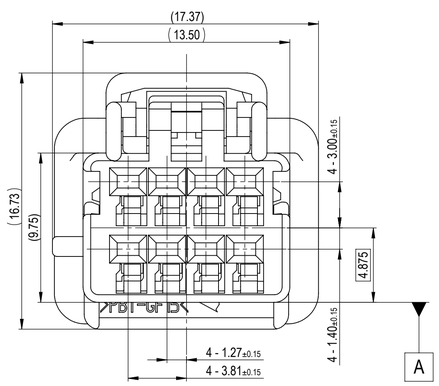

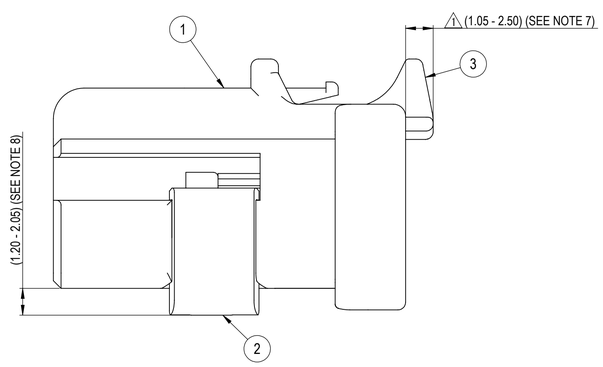

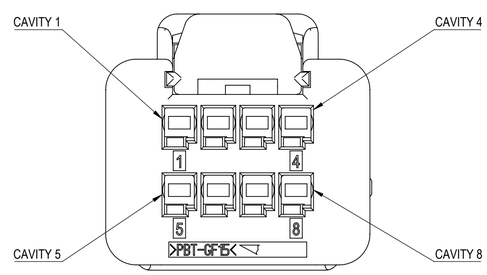

ISSUE MARK

△2	04-02-2019	REVISED APPLICABLE TERMINAL	C19-A320	MS
△1	06-21-2018	CPA SHAPE CHANGE	C18-A553	IM
-	12-14-2017	NEW	C17-AC67	JG
LET	DATE	REVISION RECORD	NO.	CHKD

GENERAL TOLERANCE

	10MAX	50MAX	100MAX	250MAX	250OVR	R5 MAX	R10 MAX	R20 MAX	R20 OVR	ANGLE	ECCENT
A	±0.15	±0.2	±0.3	±0.5	±0.75	±0.2	±0.3	±0.5	±2.5	±3°	0.1
B	±0.2	±0.3	±0.55	±0.95	±1.4					±3°	0.1
Ⓒ	±0.3	±0.5	±0.8	±1.4	±2					±3°	0.15

SPECIFIED

MASS
SEE TABLE 2

CUSTOMER					
CUSTOMER PART NO.		CUSTOMER DWG NO.			
OFFICE	YNA	TRIAL PART NO.			
VENDOR					
VENDOR NO.					
DWG TYPE	DWG SOURCE	DWG DATE	UNIT	SCL	ANGLE
R	7289-7406-30:M △2	12-14-2017	mm	5/1	3
APPROVED	CHECKED	CHECKED	DESIGN	DRAWN	
jeremy.gagnon@usyazaki.com (Digitally signed by jeremy.gagnon@usyazaki.com DN: cn=jeremy.gagnon@usyazaki.com Date: 2019.04.15 13:31:04 -04'00')	James Littek 2019.04.15 15:10:25 -04'00'	(Digitally signed by James Littek DN: cn=James Littek, o=Yazaki North America, Inc., ou=Engineering, email=James.Littek@usyazaki.com, c=US Date: 2019.04.15 15:10:25 -04'00')	NICHOLAS MYERS 10-28-2016	MICHELLE SANTILLAN 04-11-2019	

MATL. SPEC.	SEE TABLE 1
TREAT. & FIN.	N/A
NAME	8P 1.2mm UNSEALED FEMALE CONNECTOR SUB-ASSEMBLY
PART NO. CH. CODE	7289-7406-30, ETC.
DWG NO.	7289-7406-30:R
	YAZAKI CORPORATION