TABLE 1	SUB ASSEMBLY PART NUMBER	NO.	PART NUMBER	PART NAME	MATERIAL	COLOR	QUANTITY
	7287-2043-30 ETC.	1	SEE TABLE 2	0.64 TYCO GEN Y 26P UNSEALED FEMALE HOUSING	NYLON-GF	SEE TABLE 2	1
		2	7172-0244	26P 0.64 TYCO GEN Y UNSEALED FEMALE TPA	NYLON-GF	NATURAL	1

TABLE 2

SUB ASSEMBLY PART NUMBER	HOUSING PART NUMBER	KEYWAY	COLOR	YAZAKI MATING PART NO. (HORIZONTAL)	YAZAKI MATING PART NO. (VERTICAL W/ CLIP)	YAZAKI MATING PART NO. (VERTICAL W/O CLIP)
7287-2043-30	7187-2043-30	A	BLACK	7386-2043-30	7386-2094-30	7386-2098-30
7287-2044-40	7187-2044-40	B	LT. GRAY	7386-2044-40	7386-2095-40	7386-2099-40
7287-2045-80	7187-2045-80	C	BROWN	7386-2045-80	7386-2096-80	7386-2100-80
7287-2046-60	7187-2046-60	D	GREEN	7386-2046-60	7386-2097-60	7386-2101-60

(2/1)

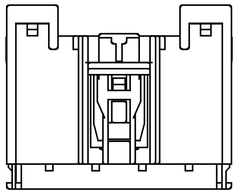

KEYWAY A
7287-2043-30

(2/1)

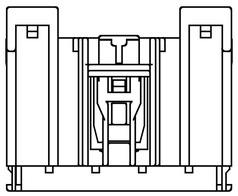

KEYWAY B
7287-2044-40

(2/1)

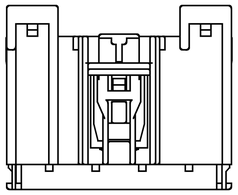

KEYWAY C
7287-2045-80

(2/1)

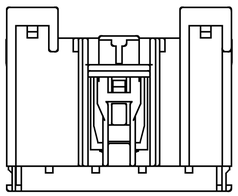

KEYWAY D
7287-2046-60

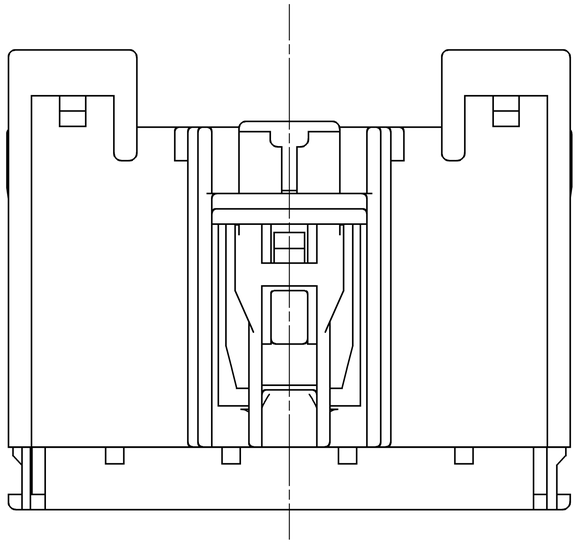

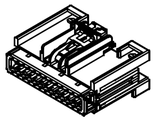

(1/1)

NOTES:

1. PARTS MUST BE PURCHASED FROM YAZAKI.
2. PARTS MUST BE FREE OF FLASH AND IMPERFECTIONS THAT AFFECT FUNCTION.
3. APPLICABLE TERMINAL NO.: 1456841-1 ETC. (TYCO GEN Y 0.64)
4. MATING PART NO.: SEE TABLE 2
5. PART DESIGNED TO SATISFY USCAR-2, REV. 4, MAY 2004, CLASS 2.
6. PART TO COMPLY WITH YPES-31-038 REQUIREMENTS.
7. THIS DIMENSION SHOWS THE PRE-SET POSITION OF THE TPA.
8. THIS DRAWING IS TO BE USED FOR INTERNAL YAZAKI PSW SUBMISSION.

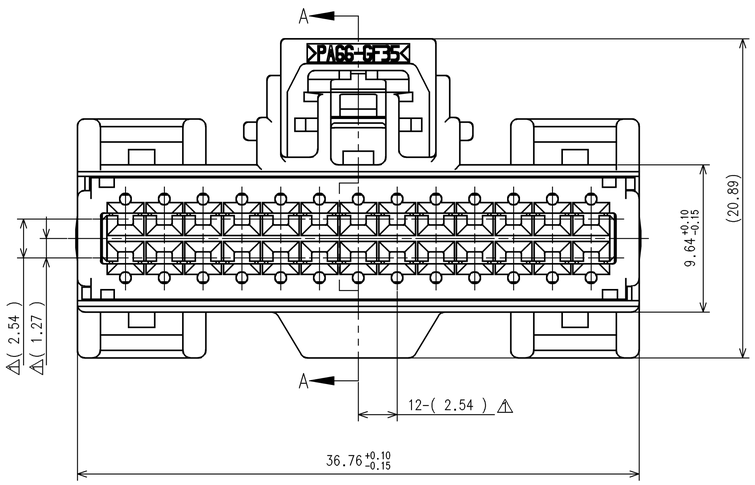

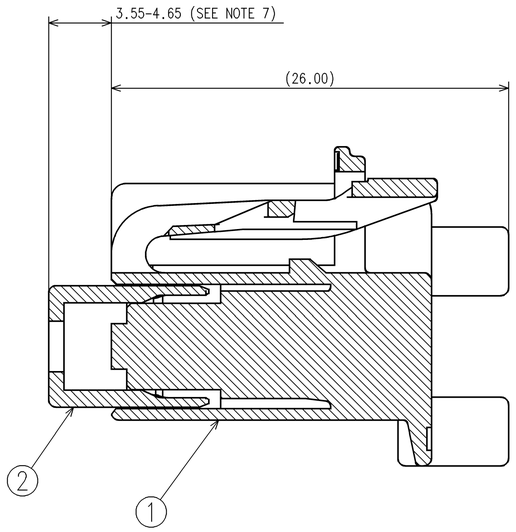

SECTION A-A

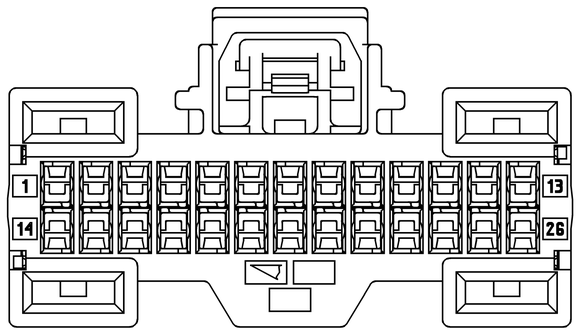

△	07-24-2014	UPDATED DIMENSIONS	C14-A319	GM
-	07-06-2007	NEW	C07-A807	MMR
LET	DATE	REVISION RECORD	NO.	CHKD

GENERAL TOLERANCE

	10 MAX	50 MAX	100 MAX	250 MAX	250 OVR	R5MAX	R10MAX	R20MAX	R200VR	ANGLE	ECCENT
A	±0.15	±0.2	±0.3	±0.5	±0.75					±3°	0.1
B	±0.2	±0.3	±0.55	±0.95	±1.4	±0.2	±0.3	±0.5	±2.5	±3°	0.1
C	±0.3	±0.5	±0.8	±1.4	±2					±3°	0.15

SPECIFIED

WEIGHT g

CUSTOMER					
CUSTOMER PART NO.		CUSTOMER DWG NO.			
OFFICE	YNA	TRIAL PART NO.	X40687-A975		
VENDOR					
VENDOR NO.					
DWG TYPE	DWG SOURCE	DWG DATE	UNIT	SCL	ANGLE
R	7287-2043-30:M △	07-06-2007	mm	5/1	3
APPROVED	CHECKED	CHECKED	DESIGN	DRAWN	
Bryan Cole 2014.08.26 08:45:33 -04'00'	Justin Gerwatowski 2014.08.21 08:26:33 -04'00'	Bernardo Olivas 2014.07.2 15:55:52 -06'00'	JUSTIN GERWATOWSKI 04-02-2007	GILBERTO MARINELARENA 07-24-2014	

MATL. SPEC. SEE TABLE 1 | TREAT. & FIN. N/A

NAME 0.64 TYCO GEN Y UNSEALED 26P FEMALE CONNECTOR SUB-ASSEMBLY

PART NO. 7287-2043-30 ETC.

DWG NO. 7287-2043-30:R

YAZAKI CORPORATION

ISSUE MARK