SUB ASSEMBLY PART NUMBER	NO.	PART NUMBER	PART NAME	MATERIAL	COLOR	QUANTITY
7287-1596-30	1	7187-1596-30	2P 1.5mm YESC REDUCED PITCH SEALED FEMALE HOUSING	PBT+GF	BLACK	1
	2	7172-0186	2P 1.5mm YESC REDUCED PITCH SEALED FEMALE TPA	PBT	NATURAL	1
	3	7137-2885-50	2P DELPHI GT 1.5mm SEALED FEMALE INTERFACE SEAL	SILICONE RUBBER	RED	1
	4	7173-0396-50	2P 1.5mm YESC REDUCED PITCH SEALED FEMALE CPA	PBT+GF	RED	1
7287-1595-30	1	7187-1596-30	2P 1.5mm YESC REDUCED PITCH SEALED FEMALE HOUSING	PBT+GF	BLACK	1
	2	7172-0186	2P 1.5mm YESC REDUCED PITCH SEALED FEMALE TPA	PBT	NATURAL	1
	3	7137-2885-50	2P DELPHI GT 1.5mm SEALED FEMALE INTERFACE SEAL	SILICONE RUBBER	RED	1

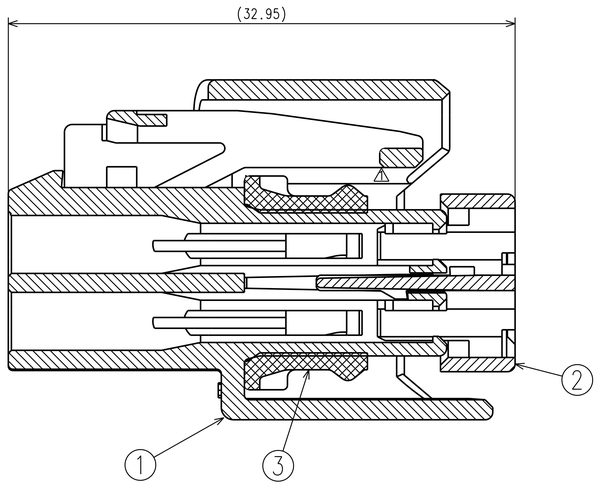

7287-1595-30 SUB ASSEMBLY WITHOUT CPA

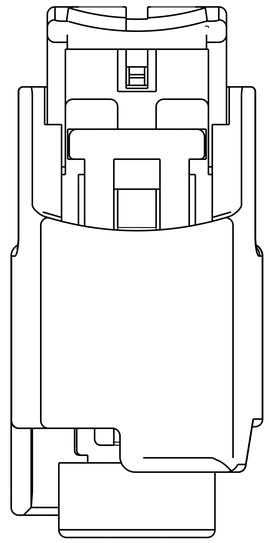

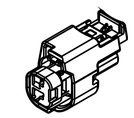

(1/1)

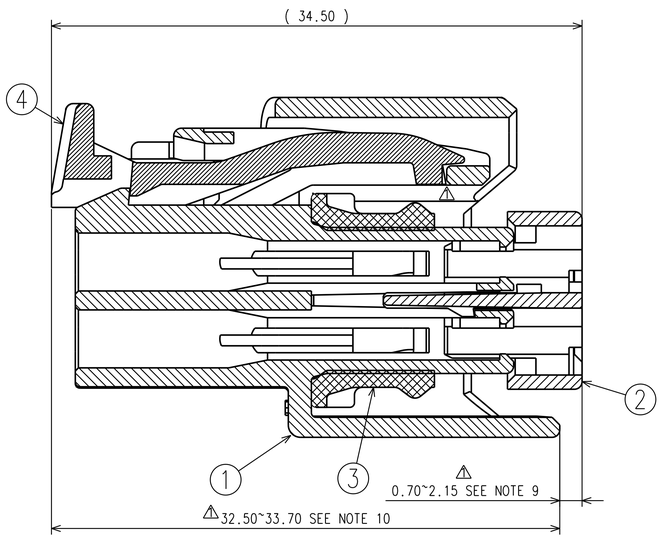

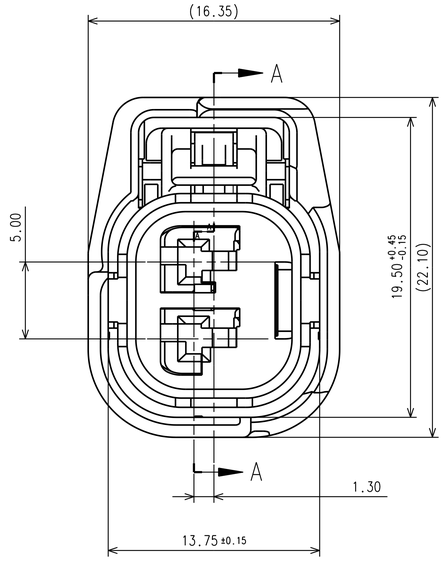

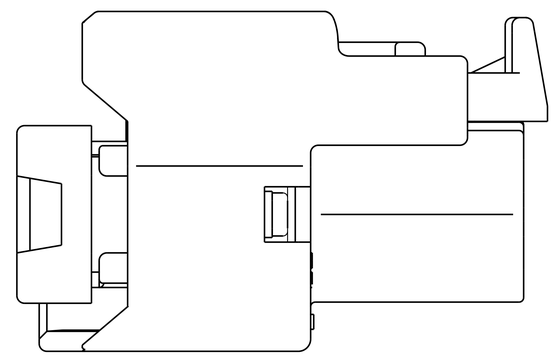

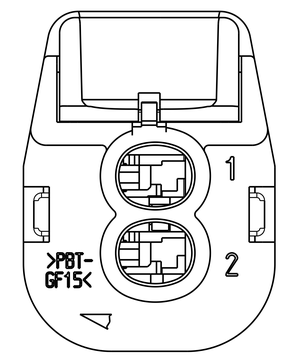

NOTES:

1. ALL PARTS MUST BE PURCHASED FROM YAZAKI.
2. PARTS MUST BE FREE OF FLASH AND IMPERFECTIONS THAT AFFECT FUNCTION.
3. APPLICABLE TERMINALS: SEE 7116-4102-02:R DRAWING (1.5 YESC)
4. APPLICABLE WIRE SEALS: SEE 7158-3374-90:R DRAWING (1.5 REDUCED PITCH)
5. APPLICABLE CAVITY PLUG: SEE 7158-3037-70:R DRAWING (1.5 REDUCED PITCH)
6. PART DESIGNED TO SATISFY USCAR-2, REV. 4, MAY 2004, CLASS 3.
7. PART DESIGNED TO MATE WITH USCAR INTERFACE: 150-S-002-1-Z01
8. PART TO COMPLY WITH YPES-31-038 REQUIREMENTS
9. THIS DIMENSION SHOWS THE PRE-SET POSITION OF THE TPA ON THE SUB-ASSEMBLY.
10. THIS DIMENSION SHOWS THE PRE-SET POSITION OF THE CPA ON THE SUB-ASSEMBLY.
11. THIS DRAWING TO BE USED FOR INTERNAL YAZAKI PSW SUBMISSION.

LET	DATE	REVISION RECORD	NO.	CHKD
△	02.19.14	CHANGED FORM	C14-A109	M.A.
-	01.11.11	NEW	C11-A020	MMR

ISSUE MARK

GENERAL TOLERANCE

	10 MAX	50 MAX	100 MAX	250 MAX	250 OVR	R5MAX	R10MAX	R20MAX	R200VR	ANGLE	ECCENT
A	±0.15	±0.2	±0.3	±0.5	±0.75					±3°	0.1
B	±0.2	±0.3	±0.55	±0.95	±1.4	±0.2	±0.3	±0.5	±2.5	±3°	0.1
Ⓒ	±0.3	±0.5	±0.8	±1.4	±?					±3°	0.15

SPECIFIED

WEIGHT g

CUSTOMER
CUSTOMER PART NO. | CUSTOMER DWG NO.
OFFICE YNA | TRIAL PART NO.
VENDOR
VENDOR NO.

DWG TYPE	DWG SOURCE	DWG DATE	UNIT	SCL	ANGLE
R	7287-1596-30:M △	01.11.11	mm	5/1	3

APPROVED	CHECKED	CHECKED	DESIGN	DRAWN
Larry Kim Digitally signed by Larry Kim Date: 2014.03.21 17:35:34 -04'00'	Rich Wong 2014.03.19 16:09:18 -04'00'	James Littek 2014.03.19 15:33:45 -04'00'	JAMES LITTEK 12.08.06	MICHIKAZU AONO 02.19.14

MATL. SPEC. SEE TABLE | TREAT. & FIN. N/A

NAME 2P 1.5mm YESC REDUCED PITCH SEALED FEMALE SUB-ASSEMBLY

PART NO. 7287-1596-30 ETC.

DWG NO. 7287-1596-30:R

YAZAKI CORPORATION