YAZAKI ASS'Y NO.	NO.	YAZAKI PART NO.	YAZAKI PART NAME	MATERIAL	COLOR	QTY
7283-6568-40	1	7183-6568-40	20P 0.64mm YESC UNSEALED FEMALE HOUSING	PBT + GF	LIGHT GRAY	1
	2	7158-4225-90	20P 0.64mm YESC UNSEALED TPA	PBT + GF	BLUE	1
	3	7158-8088-50	0.64mm UNSEALED FEMALE CONNECTOR CPA	PBT + GF	RED	1
7283-6388-40	4	7183-6568-40	20P 0.64mm YESC UNSEALED FEMALE HOUSING	PBT + GF	LIGHT GRAY	1
	5	7158-4225-90	20P 0.64mm YESC UNSEALED TPA	PBT + GF	BLUE	1

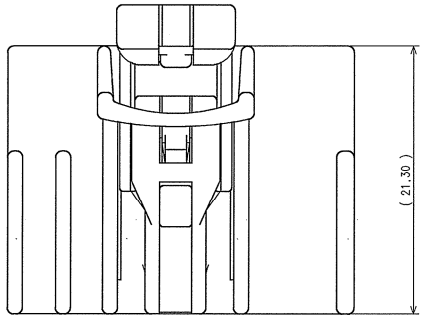

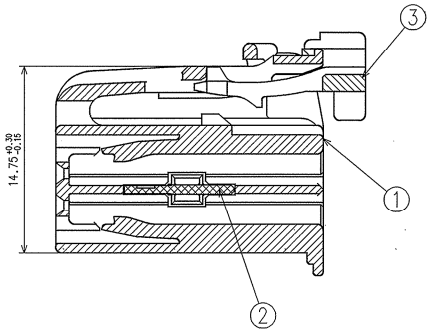

SECTION B-B

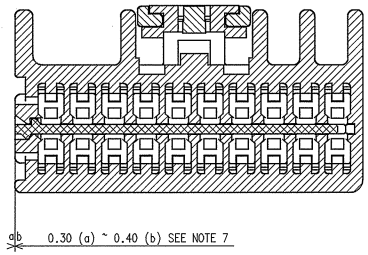

SECTION A-A

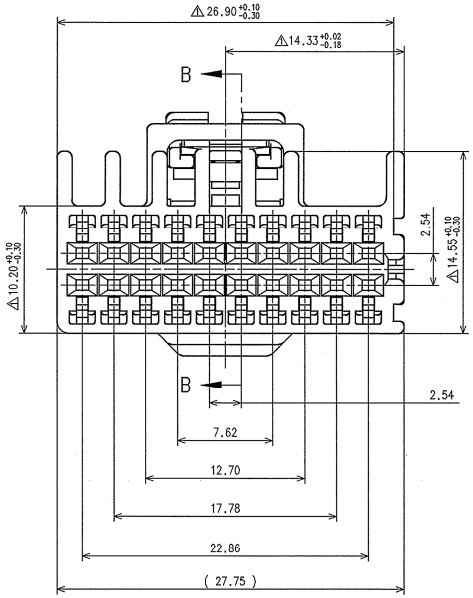

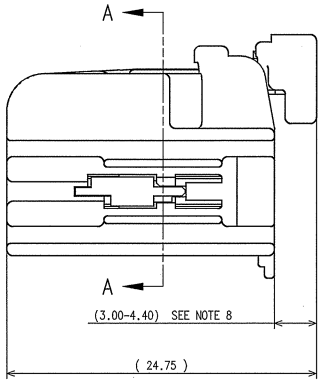

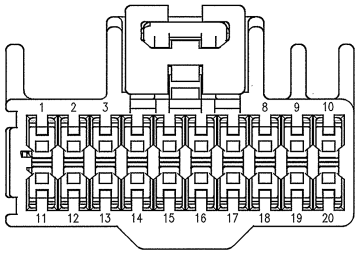

NOTES:

1. PARTS MUST BE PURCHASED FROM YAZAKI.
2. PARTS MUST BE FREE OF FLASH AND IMPERFECTIONS THAT AFFECT FUNCTION.
3. APPLICABLE TERMINAL NO.: SEE 7116-4720-02:R DRAWING (YESC 0.64mm)
4. MATING PART NO.: 7282-6568-40
5. PART DESIGNED TO SATISFY USCAR-2, REV. 3, APRIL 2001, CLASS 2.
6. PART TO COMPLY WITH YPES-31-038.
7. THIS DIMENSION SHOWS THE PRE-SET POSITION OF THE TPA.
8. THIS DIMENSION SHOWS THE PRE-SET POSITION OF THE CPA.
9. THIS DRAWING IS TO BE USED FOR INTERNAL YAZAKI PSW SUBMISSION.

LET	DATE	REVISION RECORD	NO.	CHKD
-	08.31.09	NEW	C09-A637	MMR

GENERAL TOLERANCE	10MAX	50MAX	100MAX	250MAX	2500VR	ANGLE	ECCENT
A	±0.15	±0.2	±0.3	±0.5	±0.75	±30'	0.1
B	±0.2	±0.3	±0.55	±0.95	±1.4	±30'	0.1
©	±0.3	±0.5	±0.8	±1.4	±2	±30'	0.15

SPECIFIED

WEIGHT g

CUSTOMER			
CUSTOMER PART NO.		CUSTOMER DWG NO.	
OFFICE		TRIAL PART NO.	
VENDOR			
VENDOR NO.			
DWG TYPE	DWG SOURCE	DWG DATE	UNIT / SCL / ANGLE
R	7283-6568-40:M	08.31.09	mm / 5/1 / 3
APPROVED	CHECKED	CHECKED	DESIGN / DRAWN
09.01.09		09.01.09	NICK HANCULAK 12.11.01 / 08.31.09

MATL SPEC: SEE NOTES
TREAT & FIN: SEE NOTES

NAME: 20P 0.64mm YESC UNSEALED FEMALE SUB - ASSEMBLY

PART NO. 7283-6568-40 ETC.

DWG NO. 7283-6568-40:R

YAZAKI CORPORATION

ISSUE MARK