SUB ASSEMBLY PART NO. AND CH. CODE	NO.	PART NO. AND CH. CODE	MATERIAL	COLOR	QTY.
7283-6134-70,A (7C83-6134-70,A)	1	7183-6134-70 (7B83-6134-70)	HPA	YELLOW	1
	2	7158-4737 (7B58-4737)	HPA	NATURAL	1
	3	⚠ 7144-1694,A (7B44-1694,A)	STAINLESS STEEL	———	2

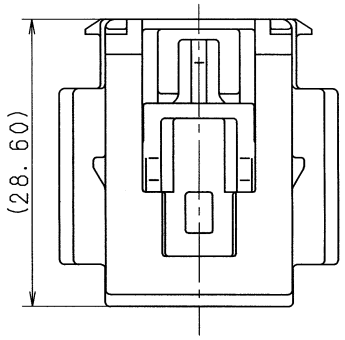

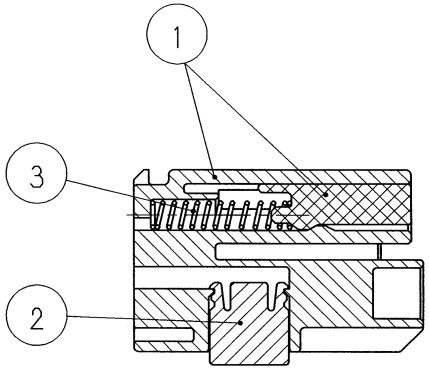

SEC. A-A

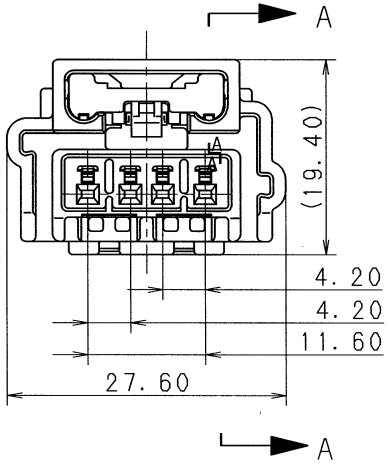

注 記

1. 適用端子品番 ： 7116-4233-08 (7B16-4233-08)
2. 嵌合相手品番 ： 7282-6134-70 (7C82-6134-70)
3. ( ) 内品番は、エアバッグ (A/B) 回路及び特別管理回路に使用する時に適用すること。

NOTES

1. APPLICABLE TERMINAL NO. :7116-4233-08 (7B16-4233-08)
2. MATING PART NO. : 7282-6134-70 (7C82-6134-70)
3. PART NUMBERS IN PARENTHESIS SHALL BE USED FOR AIR BAG (A/B) CIRCUITS AND OTHER CIRCUITS DESIGNATED FOR SPECIAL MONITORING.

ISSUE MARK

LET	DATE	REVISION RECORD	NO.	CHKD
⚠	00.12.08	CHANGED SPRING,A	C00-M564	M.N
	00.01.19	NEW	C00-L088	M.N

GENERAL TOLERANCE	10MAX	50MAX	100MAX	250MAX	2500VR	ANGLE	ECCENT
A	±0.15	±0.2	±0.3	±0.5	±0.75	±30′	0.1
B	±0.2	±0.3	±0.55	±0.95	±1.4	±30′	0.1
C	±0.3	±0.5	±0.8	±1.4	±2	±30′	0.15

SPECIFIED

MASS 9

CUSTOMER

CUSTOMER PART NO. | CUSTOMER DWG NO.

OFFICE | TRIAL PART NO.

VENDOR

VENDOR NO.

DWG TYPE	DWG SOURCE	DWG DATE	UNIT	SCL	ANGLE
R	NEW	00.01.19	mm	2/1	3

APPROVED	CHECKED	CHECKED	DESIGN	DRAWN
加藤	川梨	田口	M.NAKAMURA	FUTSUKI 石橋
00.12.21	00.12.20	100.12.15	99.04.26	00.12.08

MATL. SPEC. SEE TABLE

TREAT. & FIN.

NAME A/B 040Ⅲ 4P CONNECTOR HOUSING FEMALE SUB ASSEMBLY

PART NO. CH. CODE 7283-6134-70,A (7C83-6134-70,A)

DWG NO. 7283-6134-70:R

SET DWG NO.

YAZAKI CORPORATION