TABLE 1

YAZAKI SUB ASSEMBLY PART NO.	NO.	YAZAKI PART NO.	MATERIAL	COLOR	QTY.
7283-1060 ETC.	1	SEE TABLE 2	5 HPA	SEE TABLE 2	1
	2	7157-4021 (7B57-4021) 6	5 HPA	2 NATURAL	1

TABLE 2

YAZAKI SUB ASSEMBLY PART NO.	YAZAKI PART NO.	COLOR
7283-1060, A (7C83-1060, A) 8	7183-1060 (7B83-1060) 8	NATURAL
7283-1060-10, A	7183-1060-10	DARK GRAY
7283-1060-30, A (7C83-1060-30, A) 6	7183-1060-30 (7B83-1060-30) 6	BLACK
7283-1060-40, A	7183-1060-40	LIGHT GRAY
7283-1060-50, A	7183-1060-50	ORANGE
3 7283-1060-60, A	7183-1060-60	GREEN
7 7283-1060-70, A	7183-1060-70	YELLOW
3 7283-1060-80, A	7183-1060-80	BROWN
7283-1060-90, A	7183-1060-90	BLUE

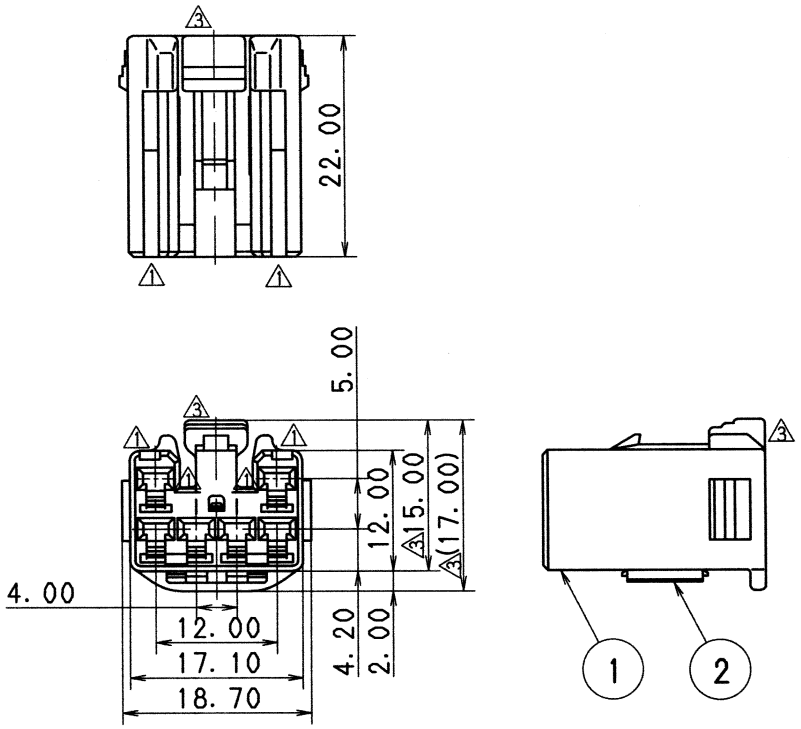

注 記

1. 嵌合相手品番: 7282-1060 ETC.
2. 適用端子品番: 7116-4020 ETC.
6. ( ) 内品番は、A/B回路及び、特別管理回路に使用する時に適用すること。

NOTES

1. MATING PART NO. : 7282-1060 ETC.
2. APPLICABLE TERMINAL NO. : 7116-4020 ETC.
6. ( ) PART NO. IS USED FOR PARTS ASSOCIATED WITH A/B CIRCUITS OR OTHER SPECIFIED CIRCUIT.

LET	DATE	REVISION RECORD	NO.	CHKD
8	04. 09. 10	ADDED A/B PART NO., ETC	C04-ZB61	T. H
7	96. 12. 25	ADDED PART NO.	C96-N214	M. K
6	96. 10. 28	ADDED A/B PART NO.	C96-M779	H. K
5	95. 03. 20	CHANGED MATERIAL, A	C95-L362	M. K
4	93. 10. 30	CHANGED MATERIAL	C93-P175	C. M
3	93. 07. 14	CHANGED FORM	C93-L729	H. F
2	90. 11. 10	CHANGED SPACER COLOR	C90-M208	M. H
1	90. 04. 04	CHANGED FORM & RENEW	C90-L365	K. O
	88. 12. 24	NEW	C89-L006	K. J

ISSUE MARK

GENERAL TOLERANCE

	10MAX	50MAX	100MAX	250MAX	2500VR	ANGLE	ECCENT
A	±0. 15	±0. 2	±0. 3	±0. 5	±0. 75	±30′	0. 1
B	±0. 2	±0. 3	±0. 55	±0. 95	±1. 4	±30′	0. 1
C	±0. 3	±0. 5	±0. 8	±1. 4	±2	±30′	0. 15

SPECIFIED

MASS g

CUSTOMER					
CUSTOMER PART NO.	CUSTOMER DWG NO.				
OFFICE	TRIAL PART NO.				
VENDOR					
VENDOR NO.					
DWG TYPE	DWG SOURCE	DWG DATE	UNIT	SCL	ANGLE
R	NEW	89. 01. 13	mm	3 2/1	3
APPROVED	CHECKED	CHECKED	DESIGN	DRAWN	
不明	平川	池田	Y. OHTA	E. PANTONI ROMEL GALIZA	
04. 9. 14	'04. 9. 14	'04. 09. 14	88. 12. 26	04. 09. 10	

MATL. SPEC. SEE TABLE 1 | TREAT. & FIN.

NAME 8 2. 3Ⅱ (090Ⅱ) 6P CONNECTOR SUB ASSEMBLY FEMALE

PART NO. / CH. CODE 7283-1060 ETC. (7C83-1060 ETC.) 8

DWG NO. 7283-1060:R | SET DWG NO.

YAZAKI CORPORATION