TABLE 1

SUB ASSEMBLY PART NO. AND CH. CODE	NO.	PART NO. AND CH. CODE	MATERIAL	COLOR	QTY.
△2 7283-1057-30 ETC.	1	SEE TABLE 2	PBT	SEE TABLE 2	1
	2	7157-4364	PBT	NATURAL	1
	3	△2 7137-2241-60	△2 SILICONE RUBBER	△2 LIGHT GREEN	1

△2 TABLE 2

SUB ASSEMBLY PART NO. AND CH. CODE	PART NO. AND CH. CODE	COLOR
7283-1057,C	7183-1057	NATURAL
7283-1057-30,C	7183-1057-30	BLACK
△3 7283-1057-40,C	7183-1057-40	LIGHT GRAY

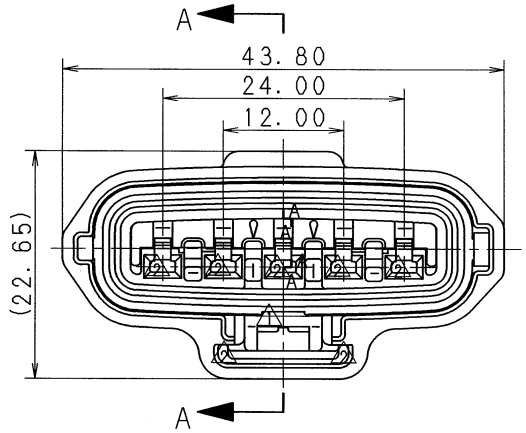

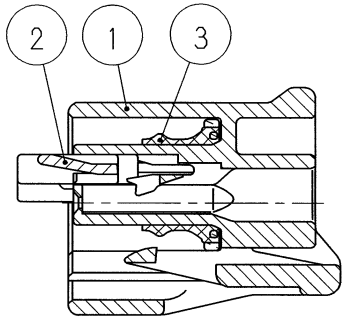

SEC. A-A

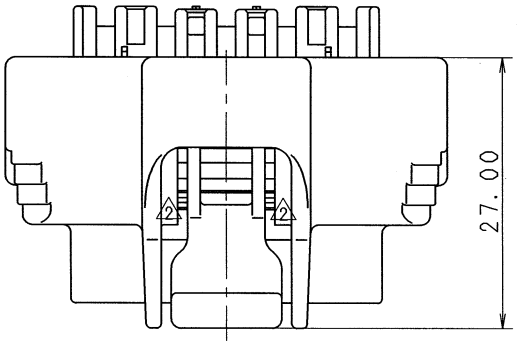

注 記

1. 適用端子品番:090Ⅱ 7116-4025 ETC.

NOTE

1. APPLICABLE TERMINAL NO.
:090Ⅱ 7116-4025 ETC.

LET	DATE	REVISION RECORD	NO.	CHKD
△3	00.11.20	ADDED COLOR NO.	C00-M513	C.T
△2	99.07.09	ELIMINATED COLOR NO., CHANGED FORM, MATERIAL, PART NO. & COLOR, C	C99-M110	C.T
△1	97.05.08	CHANGED FORM, A	C97-L770	H.K
	93.03.19	NEW	C93-L377	I.I

GENERAL TOLERANCE

	10MAX	50MAX	100MAX	250MAX	2500VR	ANGLE	ECCENT
A	±0.15	±0.2	±0.3	±0.5	±0.75	±30′	0.1
B	±0.2	±0.3	±0.55	±0.95	±1.4	±30′	0.1
C	±0.3	±0.5	±0.8	±1.4	±2	±30′	0.15

SPECIFIED

MASS g

ISSUE MARK

CUSTOMER

CUSTOMER PART NO.

CUSTOMER DWG NO.

OFFICE

TRIAL PART NO.

VENDOR

VENDOR NO.

DWG TYPE	DWG SOURCE	DWG DATE	UNIT	SCL	ANGLE
R	NEW	93.03.19	mm	2/1	3

APPROVED	CHECKED	CHECKED	DESIGN	DRAWN
加藤	川梨	鳥居	T. YAMAMOTO	Y. HATORI 石橋
00.11.30	00.11.30	00.11.28	89.05.16	00.11.20

MATL. SPEC. SEE TABLE 1

TREAT. & FIN.

NAME 090Ⅱ 5P SEALED CONNECTOR HOUSING FEMALE SUB ASSEMBLY

PART NO. CH. CODE △2 7283-1057-30 ETC.

DWG NO. 7283-1057:R

SET DWG NO.

YAZAKI CORPORATION