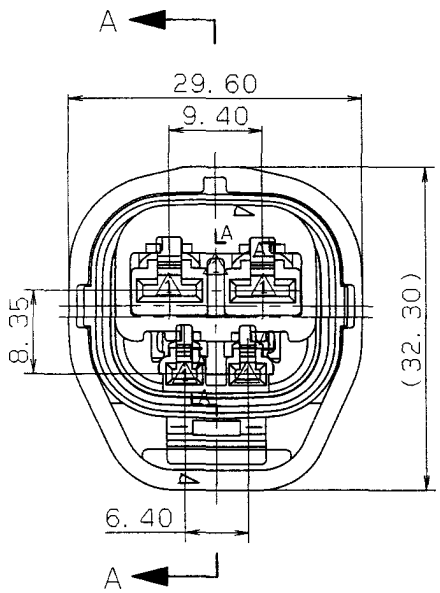

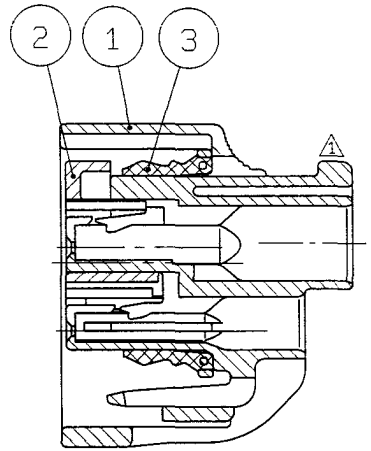

SEC. A-A

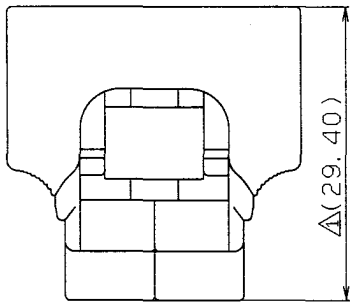

TABLE 1

SUB ASSEMBLY PART NO. AND CH. CODE	NO.	PART NO. AND CH. CODE	MATERIAL	COLOR
1 7283-1047-40.B ETC.	1	SEE TABLE 2	PBT	SEE TABLE 2
	2	7157-4101	PBT	NATURAL
	3	7137-2210	NBR	BLACK

TABLE 2

	SUB ASSEMBLY PART NO. AND CH. CODE	PART NO. AND CH. CODE	COLOR
1	7283-1047.B	7183-1047	NATURAL
1	7283-1047-10.B	7183-1047-10	DARK GRAY
1	7283-1047-30.B	7183-1047-30	BLACK
	7283-1047-40.B	7183-1047-40	LIGHT GRAY

1 NOTES

1. MATING PART NO. : 7282-1047 ETC.
2. APPLICABLE TERMINAL NO. : 090Ⅱ 7116-4025 ETC.
   : 187 7116-4035 ETC.
3. APPLICABLE RUBBER STOPPER NO. : 090Ⅱ 7158-3006 ETC.
   : 187 7158-3014 ETC.

注 記

1 1. 嵌合相手品番 : 7282-1047 ETC.
1 2. 適用端子品番 : 090Ⅱ 7116-4025 ETC.
   : 187 7116-4035 ETC.
1 3. 適用ゴム栓品番 : 090Ⅱ 7158-3006 ETC.
   : 187 7158-3014 ETC.

ISSUE MARK

1	98.10.31	CHANGED FORM. NOTES & ADDED PART NO.. NOTES.B	C98-M837	S.S
	88.06.29	NEW	8MC-0702	H.H
LET	DATE	REVISION RECORD	NO.	CHKD

GENERAL TOLERANCE

	10MAX	50MAX	100MAX	250MAX	2500VR	ANGLE	ECCENT
A	±0.15	±0.2	±0.3	±0.5	±0.75	±30′	0.1
B	±0.2	±0.3	±0.55	±0.95	±1.4	±30′	0.1
C	±0.3	±0.5	±0.8	±1.4	±2	±30′	0.15

SPECIFIED

MASS g

CUSTOMER

CUSTOMER PART NO. | CUSTOMER DWG NO.

OFFICE | TRIAL PART NO.

VENDOR

VENDOR NO.

DWG TYPE	DWG SOURCE	DWG DATE	UNIT	SCL	ANGLE
R	NEW	88.05.25	mm	2/1	3

APPROVED	CHECKED	CHECKED	DESIGN	DRAWN
加藤	山梨	鈴木	M. TSUJI	K. NAGANO 田中
98.11.06	98.11.04	98.11.03	88.05.25	98.10.31

MATL. SPEC. SEE TABLE 1 | TREAT. & FIN.

NAME 090Ⅱ 2P+187 2P SEALED HYBRID HOUSING FEMALE SUB ASSEMBLY

PART NO. CH. CODE 1 7283-1047-40.B ETC.

DWG NO. 7283-1047-40:R | SET DWG NO.

YAZAKI CORPORATION