SUB ASSEMBLY PART NO.	NO.	PART NO.	PART NAME	MATERIAL	COLOR	QTY.	YAZAKI MATING PART NO.
7282-6569-40	①	7182-6569-40	YESC KAIZEN HYBRID SYSTEM CONNECTOR 13P (M) HOUSING	PBT-GF15	LIGHT GREY	1	7283-6569-40
	②	7158-5992-50	YESC KAIZEN HYBRID SYSTEM CONNECTOR 13P (M) FRONT HOLDER	PBT	RED	1	

NOTES:
1. APPLICABLE TERMINAL PART NO.: 7114-4110-02 ETC. (2.8mm)
   7114-4120-02 ETC. (6.3mm)
2. MATING PART NO. : SEE TABLE.

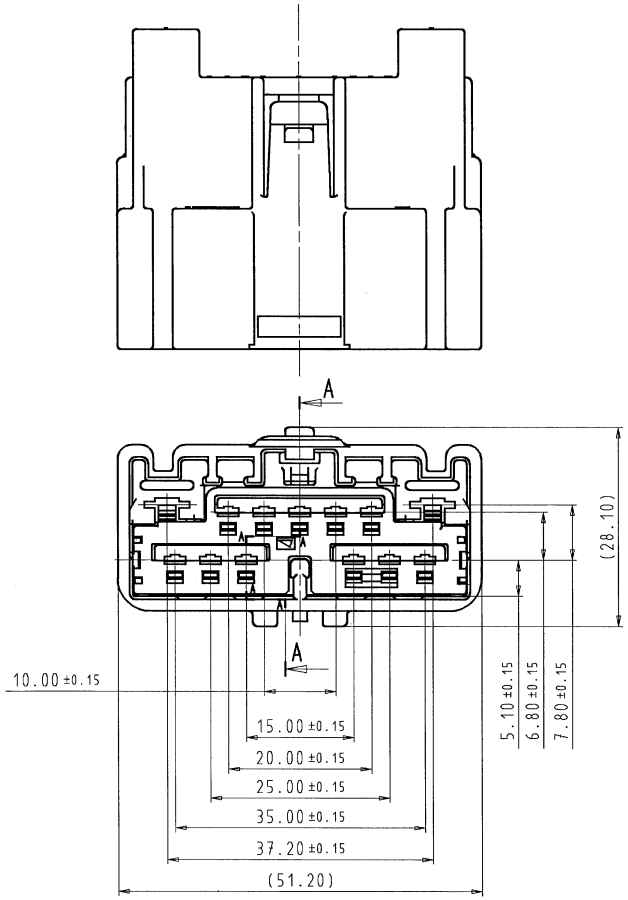

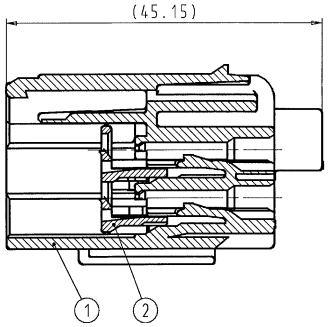

SECTION A-A

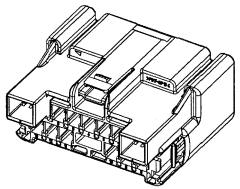

ISOMETRIC
SCALE (1:1)

GENERAL TOLERANCE							
	10MAX	50MAX	100MAX	250MAX	2500VR	ANGLE	ECCENT
A	±0.15	±0.2	±0.3	±0.5	±0.75	±30′	0.1
B	±0.2	±0.3	±0.55	±0.95	±1.4	±30′	0.1
C	±0.3	±0.5	±0.8	±1.4	±2	±30′	0.15
SPECIFIED						MASS	24.4g

LET	DATE	REVISION RECORD	NO.	CHKD
⚠	02/08/22	CHANGED REVISION RECORD NUMBER	C02-E279	M.K.
⚠	02/08/22	NEW	C02-E276	M.K.

CUSTOMER						
CUSTOMER PART NO.		CUSTOMER DWG NO.				
OFFICE		TRIAL PART NO.				
VENDOR						
VENDOR NO.						
DWG TYPE	DWG SOURCE	DWG DATE	UNIT	SCL	ANGLE	
R	NEW	03/01/20	mm	2/1	3	
APPROVED	CHECKED	CHECKED	DESIGN	DRAWN		
M.OPAFE	M.KASHIYAMA	G.GREGURIC	M.KASHIYAMA	T.JELICIC		
18-Feb-03	11 Feb 2003	03/01/20	02/08/22	03/01/20		

MATL. SPEC. SEE TABLE
TREAT. & FIN.
NAME YESC KAIZEN HYBRID SYSTEM CONNECTOR 13P (2.8X11+6.3X2) (M) SUB ASSEMBLY
PART NO. / CH.CODE 7282-6569-40
DWG NO. 7282-6569-40:R
SET DWG NO.
YAZAKI CORPORATION

ISSUE MARK

A2