SUB ASSY PART NO.	NO.	PART NUMBER	PART NAME	MATERIAL	COLOR	QUANTITY
7282-6469-40	1	7182-6469-40	4P 6.3 YESC KAIZEN UNSEALED MALE HOUSING	PBT+GF	LT. GRAY	1
	2	7158-6199	4P 6.3 YESC KAIZEN UNSEALED MALE TPA	PBT	NATURAL	1

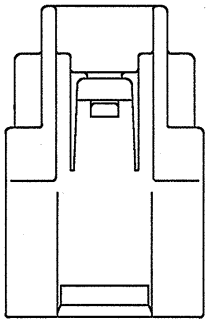

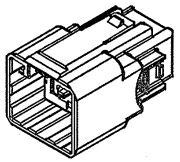

(1/1)

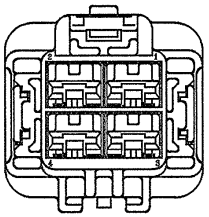

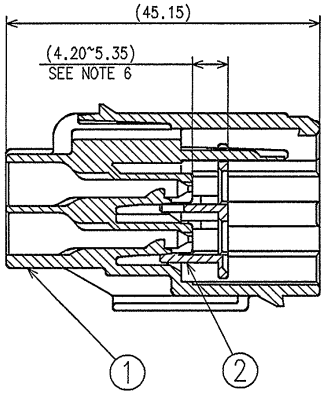

SECTION A-A

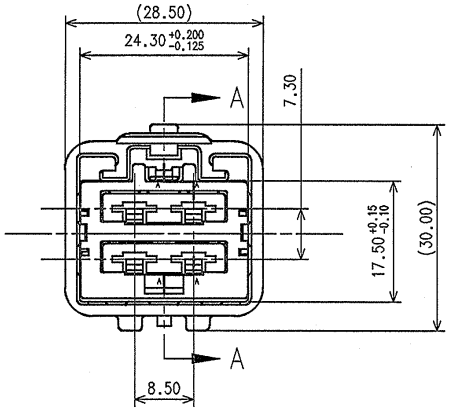

NOTES:
1. PARTS MUST BE PURCHASED FROM YAZAKI.
2. PARTS MUST BE FREE OF FLASH AND IMPERFECTIONS THAT AFFECT FUNCTION.
3. APPLICABLE TERMINAL NUMBER: SEE 7114-4120-02:R DRAWING. (6.3mm YESC)
4. MATING PART NUMBER: 7283-6469-40 OR EQUIVALENT.
5. PART DESIGNED TO SATISFY USCAR-2, REVISION 3, APRIL 2001, CLASS 2.
6. THIS DIMENSION SHOWS THE PRE-SET POSITION OF THE TPA.
7. THIS DRAWING IS TO BE USED FOR INTERNAL YAZAKI PSW SUBMISSION.

ISSUE MARK

LET	DATE	REVISION RECORD	NO.	CHKD
-	04.28.06	NEW	C06-A572	J.M.S

GENERAL TOLERANCE

	10 MAX	50 MAX	100 MAX	250 MAX	250 OVR	R5MAX	R10MAX	R20MAX	R200VR	ANGLE	ECCENT
A	±0.15	±0.2	±0.3	±0.5	±0.75	±0.2	±0.3	±0.5	±2.5	±3°	0.1
B	±0.2	±0.3	±0.55	±0.95	±1.4					±3°	0.1
C	±0.3	±0.5	±0.8	±1.4	±2					±3°	0.15

CUSTOMER				MATL. SPEC. SEE TABLE	TREAT & FIN.
CUSTOMER PART NO.		CUSTOMER DWG NO.		NAME 4P 6.3 YESC KAIZEN UNSEALED MALE SUB-ASSEMBLY	
OFFICE YNA		STDLIB NO.			
VENDOR					
VENDOR NO.					
DWG TYPE	DWG SOURCE	DWG DATE	UNIT	SCL	ANGLE
R	7282-6469-40:M	04.28.06	mm	2/1	3
APPROVED	CHECKED	CHECKED	DESIGN	DRAWN	
07.25.06		07.24.06	MICHAEL PERRY 09.13.02	06.29.06	

PART NO. 7282-6469-40

DWG NO. 7282-6469-40:R

YAZAKI CORPORATION