△2 TABLE 1

| SUB ASSEMBLY PART NO. AND CH. CODE | NO. | PART NO. AND CH. CODE | △2 PART NAME | MATERIAL | △2 COLOR | QTY. |
|---|---|---|---|---|---|---|
| 7222-7484-40 ETC. | 1 | △2 SEE TABLE 2 | SWP-TYPE HOUSING 8P M | PBT | SEE TABLE 2 | 1 |
| | 2 | 7137-1554-80 | SWP-TYPE LIP PACKING 8P | SILICONE RUBBER | RED-IRON | 1 |

△2 TABLE 2

| SUB ASSEMBLY PART NO. AND CH. CODE | PART NO. AND CH. CODE | COLOR |
|---|---|---|
| 7222-7484-30 | 7122-7484-30 | BLACK |
| 7222-7484-40 | 7122-7484-40 | GRAY |

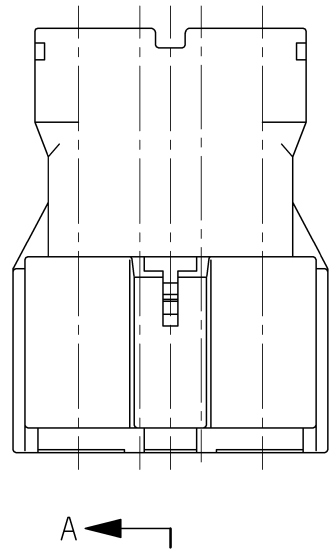


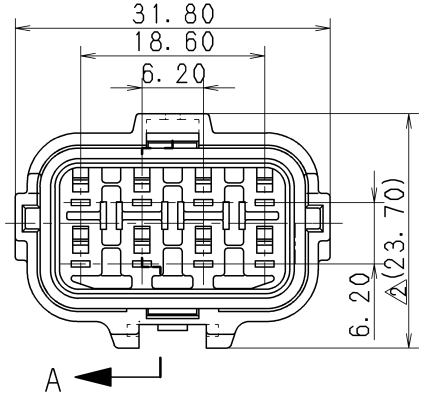


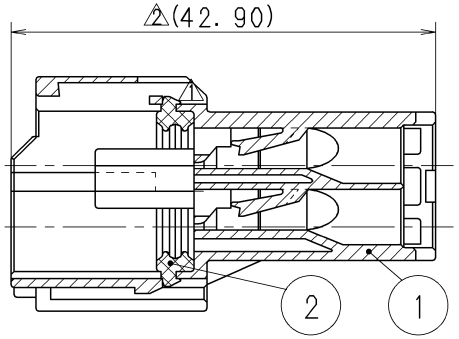


SEC. A-A

△1 注 記

1. かん合相手品番 :7123-7484-40 ETC.
△2 2. 適用端子品番 :7114-1471 ETC.
△2 3. 適用リアホルダ品番 :7157-7817-80
△2 4. 適用ゴム栓品番 :7157-7897-60 ETC.
△2 5. 適用空栓品番 :7157-8767-80 ETC.

△1 NOTES

1. MATING PART NO. :7123-7484-40 ETC.
△2 2. APPLICABLE TERMINAL PART NO. :7114-1471 ETC.
△2 3. APPLICABLE REAR HOLDER PART NO. :7157-7817-80
△2 4. APPLICABLE WIRE SEAL PART NO. :7157-7897-60 ETC.
△2 5. APPLICABLE PLUG PART NO. :7157-8767-80 ETC.

ISSUE MARK

| LET | DATE | REVISION RECORD | NO. | CHKD |
|---|---|---|---|---|
| △2 | 11.04.25 | CHANGED PART NAME ETC. | C11-Z273 | T.W |
| △1 | 93.12.20 | CHANGED FORM & RENEW | C93-L829 | K.S |

△2 GENERAL TOLERANCE

| | 10MAX | 50MAX | 100MAX | 250MAX | 2500VR | ANGLE | ECCENT |
|---|---|---|---|---|---|---|---|
| A | ±0.15 | ±0.2 | ±0.3 | ±0.5 | ±0.75 | ±30′ | 0.1 |
| B | ±0.2 | ±0.3 | ±0.55 | ±0.95 | ±1.4 | ±30′ | 0.1 |
| C | ±0.3 | ±0.5 | ±0.8 | ±1.4 | ±2 | ±30′ | 0.15 |

SPECIFIED

MASS

| | | | | |
|---|---|---|---|---|
| CUSTOMER | | | | |
| CUSTOMER PART NO. | | CUSTOMER DWG NO. | | |
| OFFICE | | TRIAL PART NO. | | |
| VENDOR | | | | |
| VENDOR NO. | | | | |
| DWG TYPE | DWG SOURCE | DWG DATE | UNIT | SCL / ANGLE |
| R | RENEW | 93.12.20 | mm | △1 2:1 / 3 |
| APPROVED | CHECKED | CHECKED | DESIGN | DRAWN |
| H. KONDO | T. KOBAYASHI | T. WATANABE | KODAMA | J. CANDO |
| 11.04.25 | 11.04.25 | 11.04.25 | 88.01.23 | 11.04.25 |

MATL. SPEC. △2 SEE TABLE 1

TREAT. & FIN.

NAME △2 SWP-TYPE HOUSING 8P M

SUB ASSEMBLY

PART NO. 7222-7484-40 ETC.

DWG NO. 7222-7484-30:R

YAZAKI CORPORATION