YAZAKI PART NO. AND CH. CODE	W1	H1	W2	H2	APPLICABLE WIRE SIZE
△1 7196-0805-02 (7B96-0805-02)	2.30	(2.20)	3.50	(2.75)	CIVUS 0.35sq

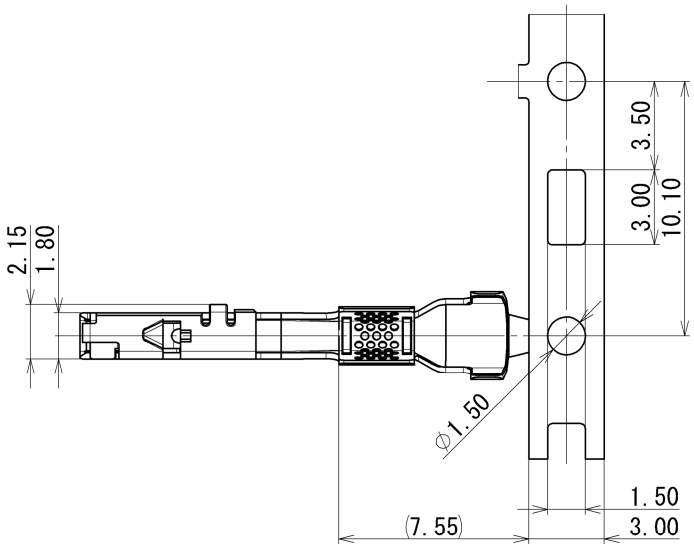

注記

△1 1. 適用ゴム栓品番： 7172-5540-80(7B72-5540-80)

2. 適用電線サイズ： 表参照

△1 3. ( )内の品番はA/B回路及び特別管理回路に使用すること。

NOTES

△1 1. APPLICABLE WIRE SEAL PART NO.: 7172-5540-80(7B72-5540-80)

2. APPLICABLE WIRE SIZE: SEE TABLE

△1 3. PART NUMBERS IN PARENTHESIS SHALL BE USED FOR AIR BAG(A/B) CIRCUITS AND OTHER CIRCUITS DESIGNATED FOR SPECIAL MONITORING.

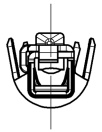

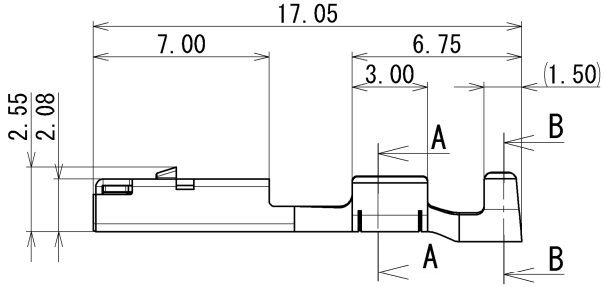

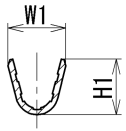

SEC. A-A

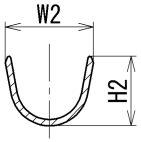

SEC. B-B

GENERAL TOLERANCE											
	10 MAX	50 MAX	100 MAX	250 MAX	250 OVR	R5 MAX	R10 MAX	R20 MAX	R20 OVR	ANGLE	ECCENT
A	±0.15	±0.2	±0.3	±0.5	±0.75	±0.2	±0.3	±0.5	±2.5	±3°	0.1
B	±0.2	±0.3	±0.55	±0.95	±1.4					±3°	0.1
C	±0.3	±0.5	±0.8	±1.4	±2					±3°	0.15

ISSUE MARK

LET	DATE	REVISION RECORD	NO.	CHKD
△1	2018/06/06	ADDED A/B NO., ETC.	C18-Y104	D.M
	2017/01/16	NEW	C17-Z010	A.Q

GENERAL TOLERANCE	10MAX	50MAX	100MAX	250MAX	250OVR	ANGLE	ECCENT
A	±0.15	±0.2	±0.3	±0.5	±0.75	±30'	0.1
B	±0.2	±0.3	±0.55	±0.95	±1.4	±30'	0.1
C	±0.3	±0.5	±0.8	±1.4	±2	±30'	0.15

SPECIFIED

MASS △(0.2) g

CUSTOMER

CUSTOMER PART NO. | CUSTOMER DWG NO.

OFFICE | TRIAL PART NO.

VENDOR

VENDOR NO.

DWG TYPE	DWG SOURCE	DWG DATE	UNIT	SCL	ANGLE
R	NEW	2017/01/16	mm	5:1	3

APPROVED	CHECKED	CHECKED	DESIGN	DRAWN
T. MATSUNAGA	R. OHFUKU	———	R. OHFUKU	D. MAI
2018/06/06	2018/06/06	———	2016/12/21	2018/06/06

MATL. SPEC. COPPER ALLOY(t=0.25) | TREAT. & FIN. TIN PLATING

NAME 1.2 TERMINAL FEMALE

PART NO. CH. CODE △1 7196-0805-02(7B96-0805-02)

DWG NO. 7196-0805-02:R | SET DWG NO.

YAZAKI CORPORATION